CTB6253X 60 cm Stainless Steel RecirculatingTelescopic Rangehood

5 YEAR MANUFACTURERS WARRANTY

Hood Type	Ventilation Capacity	Number of Power Levels	Width
Telescopic	440 m³h	2	60 cm

Main Features

Type	Slide-out
Control:	Rocker Switch
Construction Type:	Stainless Steel
Operation Levels:	2
Front Ventilation Feature:	Yes
Lighting:	2 x 28 Watt HalogenLamps
Filtration:	2 x Washable Aluminium Cassette Filter, 1 x front recirculation carbon filter
Air Extraction (according to EN61591):	440 m³/h maximum
Noise Level (high):	56 db(A)
Voltage:	220-240
Frequency:	50 Hz
Supply Cord & Plug:	2m with 10 amp plug
80mm fascia fitted with optional 40mm fascia in carton	Yes
Recirculating Operation:	Yes

Dimensions & Weights

Cutout Dimensions(HxWxD):	135 x 556 x 280 mm
Unpackaged Height:	176 mm
Unpackaged Width:	596 mm
Unpacked Depth:	280 mm
Unpackaged Weight:	7.3 kilograms
Packaged Height:	230 mm
Packaged Width:	670 mm
Packaged Depth:	360 mm
Packaged Weight:	9.62 kg
Sku:	8842013200
Ean Code:	8690842986246
Manufacturers Warranty:	2 Years + 3 Years by Registration
Launch Date:	March 2014

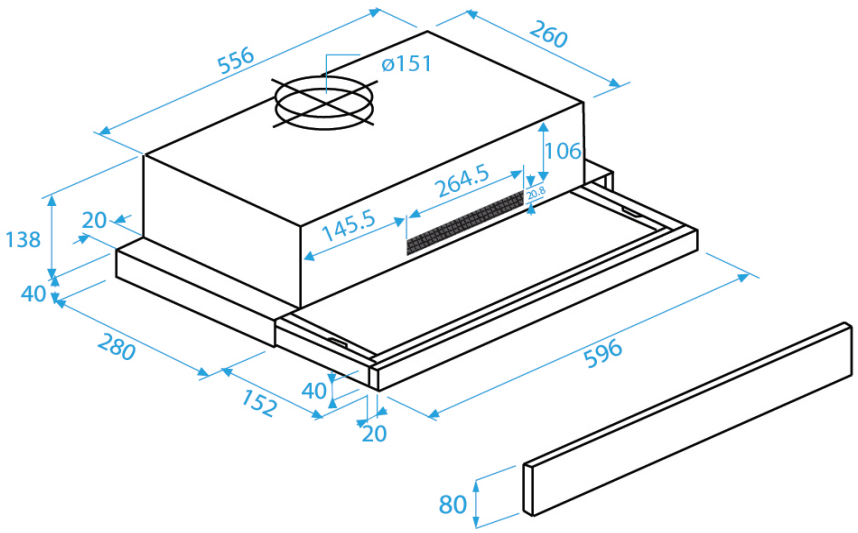

©Beko 2021

beko.com.au / beko.co.nz

*Specifications are correct at time of printing. Specifications may change without prior notice.