Dishwasher

Instruction Manual

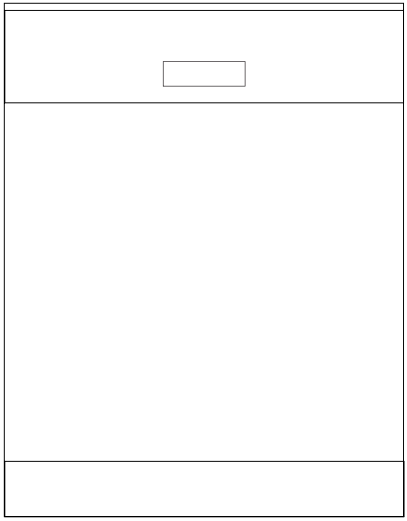

Please read this user manual first!

Dear Customer,

We hope that you get the best results from the product which has been manufactured in state-of-the-art plants and passed through a strict quality control procedure.

Therefore, please read the entire user manual carefully before using the product and keep it as a reference for future use. In case of transferring the product to someone else, give the manual as well.

The user manual will help you use your product in a fast and safe way.

- Read the user manual before installing and starting your product.
- Always follow the safety instructions.
- Keep this user manual within easy reach for future reference.
- Read also the other documents supplied with the product.

Remember that this user manual is also applicable for several other models. Differences between models will be identified in the manual.

Explanation of symbols

Throughout this User Manual the following symbols are used:

	Important information or useful hints about usage
	Warning for hazardous situations with regard to life and property
	Warning for electric shock
	Packaging materials of the product are manufactured from recyclable materials in accordance with our National Environment Regulations.

Do not dispose of the packaging materials together with the domestic or other wastes. Take them to the packaging material collection points designated by the local authorities.

This product was manufactured using the latest technology in environmentally friendly conditions.

Dishwasher

Instruction Manual

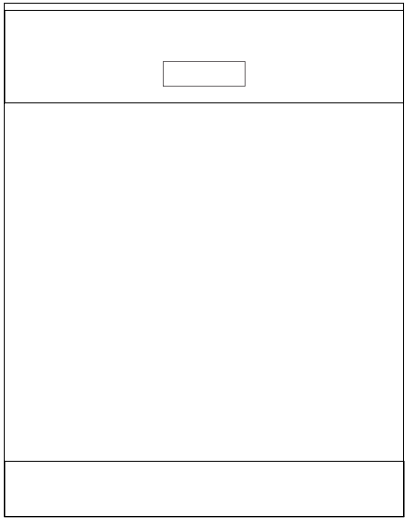

Please read this user manual first!

Dear Customer,

We hope that you get the best results from the product which has been manufactured in state-of-the-art plants and passed through a strict quality control procedure.

Therefore, please read the entire user manual carefully before using the product and keep it as a reference for future use. In case of transferring the product to someone else, give the manual as well.

The user manual will help you use your product in a fast and safe way.

- Read the user manual before installing and starting your product.
- Always follow the safety instructions.
- Keep this user manual within easy reach for future reference.
- Read also the other documents supplied with the product.

Remember that this user manual is also applicable for several other models. Differences between models will be identified in the manual.

Explanation of symbols

Throughout this User Manual the following symbols are used:

	Important information or useful hints about usage
	Warning for hazardous situations with regard to life and property
	Warning for electric shock
	Packaging materials of the product are manufactured from recyclable materials in accordance with our National Environment Regulations.

Do not dispose of the packaging materials together with the domestic or other wastes. Take them to the packaging material collection points designated by the local authorities.

This product was manufactured using the latest technology in environmentally friendly conditions.

CONTENTS

1. Dishwasher 3
Technical specifications 4

2. Important safety instructions 5
General safety 5
Intended use 6
Children's safety 6

3. Installation 7
Appropriate installation location 7
Connecting water supply 7
Connection to the drain 8
Adjusting the feet 9
Aquasafe+ 9
Electrical connection 9
Initial use 9
Disposing of packaging material 10
Transportation of the product 10
Compliance with the WEEE Directive and Disposing of the Waste Product: 10
Compliance with RoHS Directive: 10

4. Prewashing 11
Tips for energy saving 11
Water softening system 11
Adjusting the water softening system 11
Adding salt 12
Detergent 13
Adding detergent 13
Tablet detergents 14
Rinse aid 15
Silverware basket 18
Silverware basket piece 18
Movable silverware basket 18
Collapsible lower basket wires (2 pieces) 19
Collapsible lower basket wires (4 pieces) 19
Collapsible lower basket wires (6 pieces) 20
Collapsible lower basket wires (4 & 8 pieces) 21
Lower basket multipurpose / height adjustable service rack 22
Lower Basket Glass Holder 23
SoftTouch Accessory 23
Lower basket bottle wire 23
Upper basket height adjustable rack 24
Upper basket drawer 24
Upper basket glass support piece 24
Collapsible upper basket wires 25
Upper basket glass support piece 25
Collapsible upper basket wires 26
Adjusting the height of loaded upper basket 27
Adjusting the height of loaded upper basket 28
Adjusting the height of empty upper basket 29
Ceiling silverware basket 30

5. Operating the product 31
Keys 32
Preparing the machine 32
Programme selection 32
Auxiliary functions 34
InnerClean **35**
Programming the washing time 35
Starting the programme 36
Child (Key) Lock 37
Cancelling the programme 37
Salt indicator ( ) 37
Rinse Aid indicator ( ) 37
End of programme 37
Water cut-off warning 38
Overflowing warning 38

6. Maintenance and cleaning 39
Cleaning the outer surface of the product 39
Cleaning the interior of the machine 39
Cleaning the filters 39
Cleaning the hose filter 40
Cleaning the impellers 40

7. Troubleshooting 42

1 Dishwasher

Overview

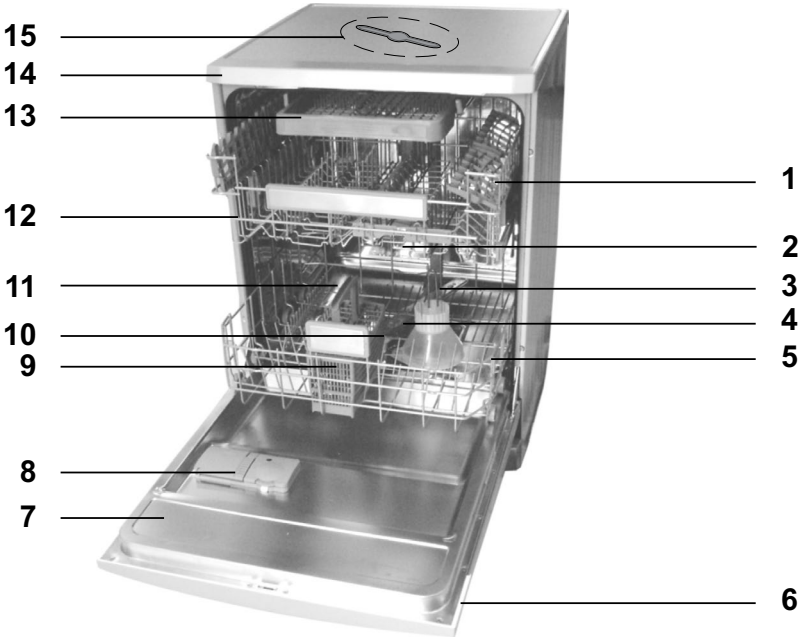

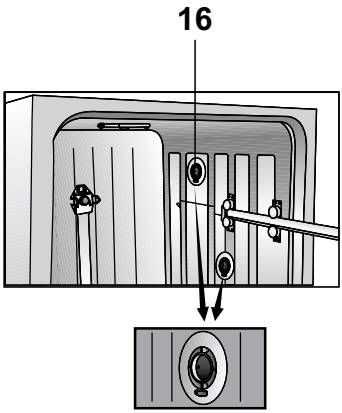

1.Upper basket with rack
2.Upper impeller
3.Lower impeller
4.Filters
5.Lower basket
6.Control panel
7.Door
8.Detergent dispenser
9.Silverware basket
10. Lower impeller slot
11. Salt reservoir lid
12. Upper basket rail
13. Ceiling silverware basket
14. Tabletop (depends on the model)
15. Ceiling impeller
16. Fan drying system (depends on the model)

Technical specifications

This product complies with the following EU directives:
Development, production and sales stages of this product comply with the safety rules included in all pertaining European Community regulations.
2006/95/EC, 2004/108/EC, 93/68/EEC, IEC 60436, EN 50242

Power input	220-240 V, 50 Hz
Total power consumption	1800-2100 W
Heater power consumption	1800 W
Total current (depends on the model)	10 A (see type plate)
Drain pump power consumption	30 W
Water pressure	0.3 -10 bar (= 3 - 100 N/cm² = 0.03-1.0 Mpa)

- Technical specifications may be changed without prior notice to improve the quality of the product.
- Figures in this manual are schematic and may not match the product exactly.
- Values stated on the product labels or in the documentation accompanying it are obtained in laboratory conditions in accordance with the relevant standards. Depending on operational and environmental conditions of the product, these values may vary.

Note for test institutions:
Data required for performance tests shall be provided upon request. Requests can be e-mailed to the following address:

dishwasher@standardloading.com

Do not forget to provide the code, stock and serial numbers of the product to be tested in your request e-mail along with your contact information. Code, stock and serial numbers of the product is located on the type label attached to the side of the door.

2 Important safety instructions

This section contains safety instructions that will help to get protected from risk of personal injury or property damage Failure to follow these instructions shall void all warranties.

General safety

- Never place the product on a carpet-covered floor; otherwise, lack of airflow beneath the product will cause electrical parts to overheat. This will cause problems with your product.
- Do not operate the product if the power cable / plug is damaged! Call the Authorised Service Agent.
- Connect the product to a grounded outlet protected by a fuse complying with the values in the "Technical specifications" table. Do not neglect to have the grounding installation made by a qualified electrician. Manufacturer shall not be liable for any damages that will arise when the product is used without grounding in accordance with the local regulations.
- The water supply and draining hoses must be securely fastened and remain undamaged.
- Unplug the product when not in use.
- Never wash the product by spreading or pouring water onto it! There is the risk of electric shock!
- Never touch the plug with wet hands! Never unplug by pulling on the cable, always pull out by grabbing the plug.
- The product must be unplugged during installation, maintenance, cleaning and repairing procedures.
- Always have the installation and repairing procedures carried out by the Authorised Service Agent. Manufacturer shall not be held liable for damages that may arise from procedures carried out by unauthorised persons.
- Never use chemical solvents in the product. They bring forth risk of explosion.
- When you pull the upper and lower baskets out completely, the door of the product will bear all the weight of the

baskets. Do not put other loads on the door; otherwise, the product may tilt.

- Never leave the door of the product open apart from loading and unloading procedures.
- Do not to open the door of the product when it is running unless necessary. Be careful for the rush of hot steam when you need to open the door.

Intended use

This appliance is intended to be used in household and similar applications such as:

- staff kitchen areas in shops, offices and other working environments;
- farm houses;
- by clients in hotels, motels and other residential type environments;
- bed and breakfast type environments;
- Only dishwasher safe detergents, rinse aids and additives must be used.
- The manufacturer waives any responsibility arisen from incorrect usage or transportation.
- The service life of your product is 10 years. During this period, original spare parts will be available to operate the appliance properly.
- This product should not be used by persons with physical, sensory or mental disorders or unlearned or inexperienced people (including children) unless they are attended by a person who will be responsible for their safety or who will instruct them accordingly for use of the product.

Children's safety

- Electrical products are dangerous for the children. Keep children away from the product when it is in use. Do not let them to tamper with the product.
- Do not forget to close the door of the product when leaving the room where it is located.
- Store all detergents and additives in a safe place away from the reach of the children.

3 Installation

Refer to the nearest Authorised Service Agent for installation of your product. To make the product ready for use, make sure that the electricity, tap water supply and water drainage systems are appropriate before calling the Authorised Service Agent. If they are not, call a qualified technician and plumber to have any necessary arrangements carried out.

ⓘ Preparation of the location and electrical, tap water and waste water installations at the place of installation is under customer's responsibility.

⚠ Installation and electrical connections must be carried out by the Authorised Service Agent. Manufacturer shall not be held liable for damages that may arise from procedures carried out by unauthorised persons.

⚠ Prior to installation, visually check if the product has any defects on it. If so, do not have it installed. Damaged products cause risks for your safety.

⚠ Make sure that the water inlet and discharge hoses are not folded, pinched or crushed while pushing the product into its place after installation or cleaning procedures.

When placing the product, pay attention not to damage the floor, walls, piping, etc. Do not hold the product from its door or panel to move it.

Appropriate installation location

- Place the product on a solid and flat floor that has sufficient load carrying capacity! The product must be installed on a flat surface in order for the door to be closed comfortably and securely.
- Do not install the product at places where temperature may fall below 0°C.
- Place the product at least 1 cm away from the edges of other furniture.
- Place the product on a rigid floor. Do not place it on a long pile rug or similar surfaces.

⚠ Do not place the product on the power cable.

- Make sure that you select a location that will allow you to load and unload the dishes in a fast and comfortable manner.
- Install the product in a place close to the tap and the drain hole. Select the installation location by considering that it will not be changed after the connections are made.

Connecting water supply

ⓘ We recommend attaching a filter on the house/apartment supply water inlet to protect the machine from damages that may arise from impurities (sand, dirt, rust, etc.) coming from the urban water supply system or from your own water system as well as to prevent complaints such as yellowing or

sludge accumulation at the end of washing.

Permitted water temperature: up to 25°C

The dishwasher may not be connected to open warm water devices or flow-through water heaters.

- Do not use old or used water inlet hose on the new product. Use the new water inlet hose supplied with the product.
- Connect the water inlet hose directly to the water tap. Pressure coming from the tap should be minimum 0.3 and maximum 10 bars. If the water pressure exceeds 10 bars, a pressure relief valve should be installed in between.

ⓘ Use a screw-on hose connector to connect the water inlet hose to a water tap with a ¾ inch external thread. If required, use a filter insert to filter deposits from the pipes.

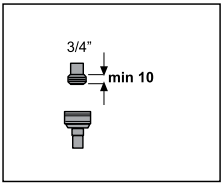

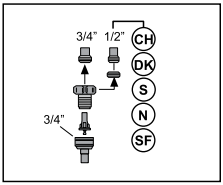

- Open the taps completely after making the connections to check for water leaks.

⚠ For your safety, close the water inlet tap completely after the washing programme is over.

Connection to the drain

Water discharge hose can directly be connected to the drain hole or sink's drainage. The length of this connection must be min. 50 cm and max. 100 cm from the floor.

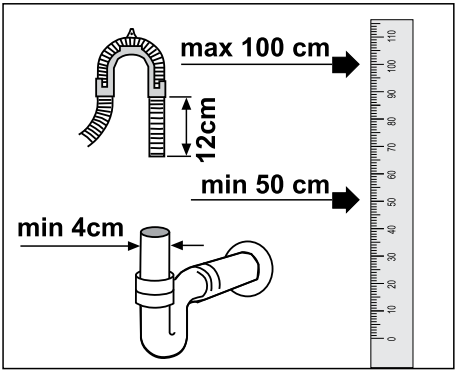

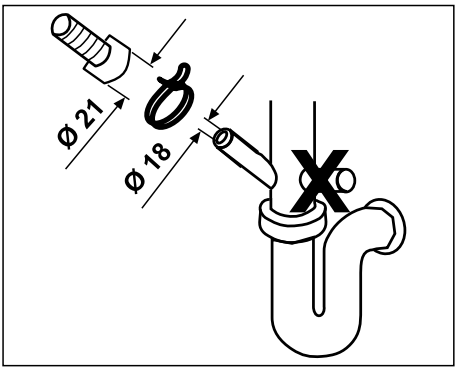

A discharge hose longer than 4 meters causes dirty washing. Attach the water discharge hose to the drainpipe without bending it. Tightly fix the water discharge hose to the drainpipe in order to prevent any dislocation of the water discharge hose during operation of the product.

ⓘ Drainpipe must be connected to the sewage system and it should not be connected to any surface water.

Adjusting the feet

If the door of the product cannot be closed properly or if the product swings when you push it slightly, then you need to adjust the feet of the product. Adjust the feet of the product as illustrated in the installation manual supplied with the product.

Aquasafe+

(depends on the model)

Protect the Aquasafe+ system against water leaks that may occur at hose inlet. Water contact with the valve box of the system must be prevented. Otherwise, electrical assembly will get damaged. If the Aquasafe system is damaged, unplug the product and call the Authorised Service Agent.

⚠ As the hose set contains electrical connections and assemblies, never shorten or lengthen the hose with extension hoses.

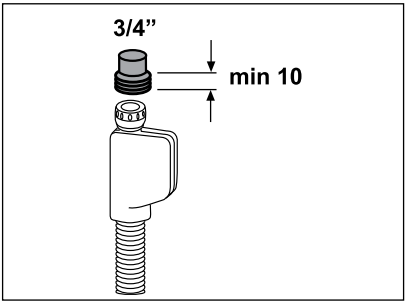

Electrical connection

Connect the product to a grounded outlet protected by a fuse complying with the values in the "Technical specifications" table. Manufacturer shall not be liable for any damages that will arise when the product is used without grounding in accordance with the local regulations.

- Connection must comply with national regulations.
- Power cable plug must be within easy reach after installation.

⚠ Unplug the product after the washing programme is over.

- The voltage and allowed fuse or breaker protection are specified in the “Technical specifications” section. If the current value of the fuse or breaker in the house is less than 16 Amps, have a qualified electrician install a 16 Amp fuse.
- The specified voltage must be equal to your mains voltage.
- Do not make connections via extension cables or multi-plugs.

⚠ Damaged power cables must be replaced by the Authorised Service Agent.

⚠ If the product has a failure, it should not be operated unless it is repaired by the Authorised Service Agent! There is the risk of electric shock!

Initial use

Before starting to use the product, make sure that all preparations are made in accordance with the instructions in sections "Important safety instructions" and "Installation".

- To prepare the product to do the dishes, perform first operation in the shortest programme with detergent while the machine is empty. During the initial use, fill the salt reservoir with 1 litre of water prior to filling it with salt.

ⓘ Some water might have remained in the product due to the quality control processes in the production. It is not harmful for the product.

Disposing of packaging material

Packaging materials are dangerous to children. Keep packaging materials in a safe place away from reach of the children.

Package information

Packaging materials of the product are manufactured from recyclable materials in accordance with our National Environment Regulations. Do not dispose of the packaging materials together with the domestic or other wastes. Take them to the packaging material collection points designated by the local authorities.

Transportation of the product

⚠ If you need to move the product, do it in upright position and hold from the rear side. Slanting the product onto its front side may cause the electronic parts in it get wet and damaged.

1. Unplug the product before transporting it.
2. Remove water drainage and water supply connections.
3. Drain the remaining water in the product completely.

Compliance with the WEEE Directive and Disposing of the Waste Product:

This product complies with EU WEEE Directive (2012/19/EU). This product bears a classification symbol for waste electrical and electronic equipment (WEEE).

This product has been manufactured with high quality parts and materials which can be reused and are suitable for recycling. Do not dispose of the waste product with normal domestic and other wastes at the end of its service life. Take it to the collection center for the recycling of electrical and electronic equipment. Please consult your local authorities to learn about these collection centers.

Compliance with RoHS Directive:

The product you have purchased complies with EU RoHS Directive (2011/65/EU). It does not contain harmful and prohibited materials specified in the Directive.

4 Prewashing

Tips for energy saving

Following information will help you use the product in an ecological and energy-efficient manner.

- Wipe away any coarse food remnants on the dishes before putting them in the product.
- Operate the product after filling it completely.
- When selecting a programme, refer to the “Programme Table”.
- Do not put more detergent than suggested on the detergent package.

Water softening system

ⓘ The dishwasher requires soft water. If the hardness of the water is above 6°dH, the water must be softened and descaled. Otherwise, ions that create the hardness will accumulate on the surfaces of the dishes and may adversely affect the washing, shining and drying performances of the product.

The product is equipped with a water softening system which reduces the hardness of incoming water. This system softens the supply water that enters into the product to a level that will allow washing the dishes with the required quality.

Adjusting the water softening system

Washing performance will increase when water softening system is adjusted properly.
Use the test stripe supplied with the product to determine the supply water hardness in order to adjust the system.

Adding salt

Water softening system needs to be regenerated in order for the product operates with the same performance continuously. Dishwasher salt is used for this purpose.

ⓘ Use in your product only the special softening salts produced particularly for use in dishwashers.

ⓘ We recommend using granular or powder softening salts. Do not use salts containing insoluble substances such as table salt or common salt in the machine. Performance of water softening system may deteriorate in time.

ⓘ Salt reservoir will fill with water when you start the product. Therefore, add the softening salt before starting the machine.

1. First take the lower basket out to add softening salt.
2. Turn the salt reservoir lid in counter clockwise to open it (A, B).

ⓘ Before initial use, fill the water softening system with 1 litre of water (C).

3. Fill the salt reservoir with salt by using salt funnel (D). To speed up dissolution rate of salt in water, stir it with a spoon.

ⓘ You can put about 2 kg of softening salt into the salt reservoir.

4. Replace the lid and tighten it securely when the reservoir is full.

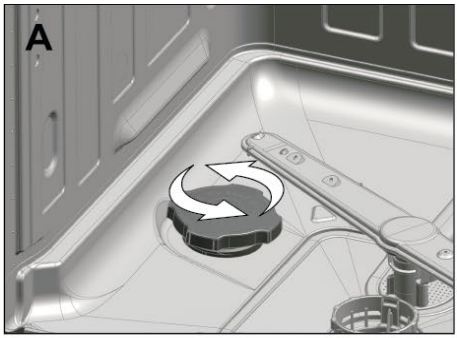

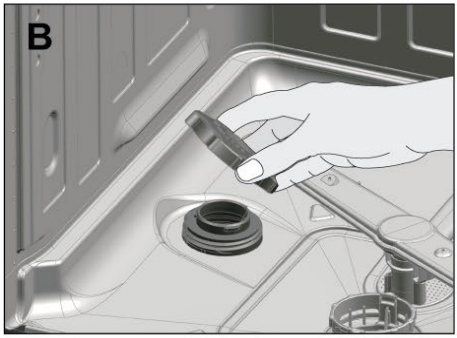

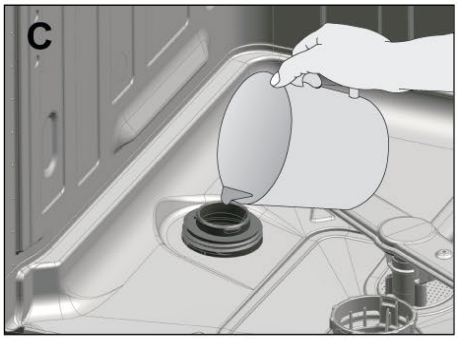

5. If you will not start a washing programme immediately after adding the salt, run the machine empty in the shortest programme to dissolve and wash away the scattered salt in the machine.

ⓘ Since different salt brands in the market have different particle sizes and since the water hardness may vary, dissolution of the salt in water may take a couple of hours. Therefore, Salt Indicator remains on for a while after adding salt into the machine.

Detergent

You can use powder or tablet detergent in the machine.

ⓘ Only use in the machine the detergents produced particularly for use with dishwashers. We recommend you not to use detergents that contain chlorine and phosphate as they are harmful for the environment.

ⓘ Contact the detergent producer if the dishes are wet and/or if you notice limescale spots particularly on glasses after the washing programme is over.

Adding detergent

ⓘ Refer to the “Programme Table” to determine the correct amount of detergent for the selected programme.

⚠ Do not put solvents into the detergent dispenser. There is the risk of explosion!

Put the detergent into the detergent dispenser just before operating the machine as illustrated below.

1. Push the latch to right to open the detergent dispenser lid (A).

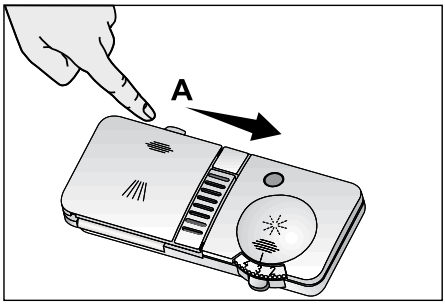

2. Put suggested amount of powder or tablet detergent in the dispenser.

ⓘ Inside the detergent dispenser, there are level markings that help you use appropriate amount of detergent. When brimful, detergent dispenser will contain 40 cm³ of detergent. Fill detergent up to 15 cm³ or 25 cm³ level marks in the detergent dispenser according to fullness of the machine and/or soiling degree of the dishes (1).

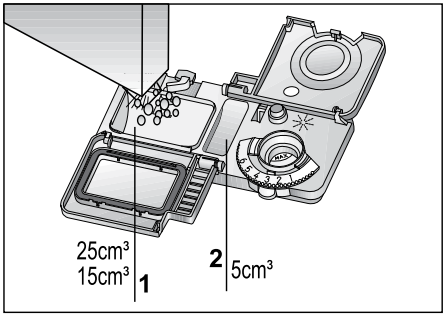

ⓘ If dishes have been waiting for a long time and have dried residues, fill the 5 cm³ compartment too (5).

3. Close the detergent dispenser lid by pressing on it lightly. A

"click" will be heard when the lid is closed.

ⓘ In programmes with prewash and at high temperature, in which you use tablet detergents, make sure that the detergent dispenser lid is closed firmly.

ⓘ Use powder detergent in short programmes without prewash since the solubility of the tablet detergent changes depending on the temperature and time.

⚠ Excessive usage of powder detergents will cause the detergent not dissolve completely and will also cause scratches on the glassware.

Tablet detergents

Table detergents exhibit water softening and / or rinse aid effect in addition to detergent effect. Some types of these detergents also contain special-purpose washing chemicals such as glass and stainless steel protectors.

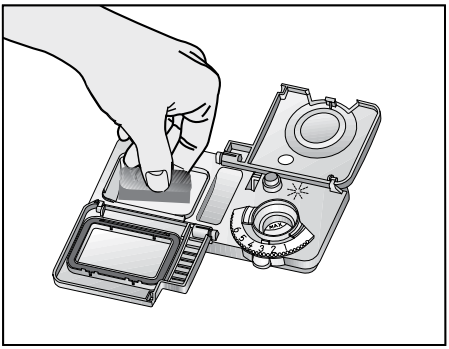

ⓘ Tablet detergents give satisfying results only under certain usage conditions. The best washing performance in dishwashers is obtained by using detergent, rinse aid and water softening salt individually.

ⓘ Information about suitable places (detergent dispenser, basket etc.) in the dishwasher to place the tablet can be found amongst the usage instructions on the packages of the tablet detergents.

Tablet detergent types commonly found in the market:
2in1: Contains detergent, rinse aid or water softening salt
3in1: Contains detergent, rinse aid and water softening salt
4in1: Contains glass protectors in addition to detergent, rinse aid and water softening salt
5in1: Contains glass and stainless steel protectors in addition to detergent, rinse aid and water softening salt

ⓘ Observe the instructions of the detergent manufacturer on the package when using tablet detergents.

When you switch to powder detergent from tablet detergent:

1. Make sure that salt and rinse aid reservoirs are full.
2. Set the water hardness to the highest level and perform an empty run.
3. After the empty washing cycle, review the user manual and readjust the water hardness level so as to suit the water supply.
4. Make the appropriate rinse aid settings.

ⓘ Depending on the model, salt indicator and/or rinse aid indicator must be enabled again if they were disabled before.

Rinse aid

ⓘ The rinse aid used in dishwashers is a special combination used to increase drying efficiency and prevent water or limescale stains on the washed items. For this reason, care must be paid to have rinse aid in the rinse aid reservoir and to use rinse aids produced specially for dishwashers only.

Check Rinse Aid Indicator to determine whether it is necessary to add rinse aid or not 3 (depends on the model). Having a dark light on the indicator shows that there is sufficient amount of rinse aid in the dispenser. If the colour of the indicator is light, add rinse aid.

1. Open the lid of the rinse aid reservoir by pressing its latch (B).

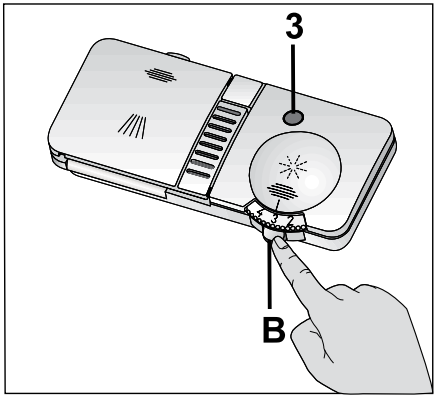

2. Fill the reservoir until “MAX” level.
3. Close the lid of the reservoir by pressing on it lightly.

ⓘ Wipe clean any spilled rinse aid outside the reservoir. Rinse aid that spilled accidentally will cause foaming and it will eventually decrease washing performance.

4. Turn the rinse aid amount adjuster manually to a position between 1 and 6 (4). If there are stains on tableware items after washing, level must be increased and if there is a blue trace after wiping them by hand, it must be decreased. This is set to position 4 as factory default.

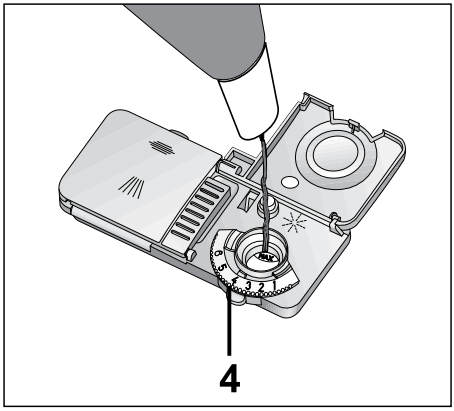

Items not suitable for washing in the dishwasher

- Never wash dishes soiled by cigarette ash, candle remnants, polish, dyestuff, chemicals, etc. in your dishwasher.
- Do not wash iron alloy items in the dishwasher. It can get corroded or leave stains on other items.
- Do not wash silverware and cutlery with wooden or bone stems, glued pieces, or pieces that are not resistant to heat, as well as copper and tin-plated containers in the dishwasher.

ⓘ Decorative prints of chinaware as well as aluminum and silver items may get discoloured or tarnished after washing in the dishwasher just as it happens in handwashing

as well. Some delicate glass types and crystals may become dull in time. We strongly recommend you to check if the tableware you are going to purchase is suitable for washing especially in the dishwasher.

Placing the dishes into the dishwasher

You can use your dishwasher in the optimum way with respect to energy consumption and washing and drying performance only if you place the dishes in an orderly way.

- Wipe away any coarse food remnants (bones, seeds, etc.) on the dishes before placing them in the dishwasher.
- Place thin, narrow pieces in the middle sections of baskets if possible.
- There are two separate baskets in which you can place your dishes in the dishwasher. Place the heavily soiled and bigger items in the lower basket and smaller, delicate and light items in the upper basket.
- Place the hollowed dishes such as bowls, glasses and pans upside down in the dishwasher. Thus, accumulation of water in deep hollows is prevented.

⚠ To prevent possible injuries, always place the sharp and pointed dishes such as service fork, bread knife, etc. upside down so as their pointed ends will face down or they will lie horizontally on the dish baskets.

- Unload dishes in the lower basket first and then the dishes in the upper basket.

Suggestions for loading the dishwasher

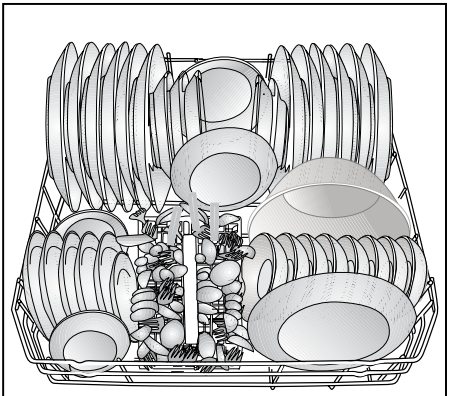

Lower basket

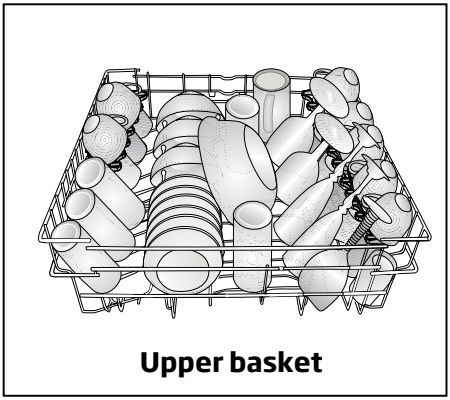

Upper basket

Improper Loading Of Dishware

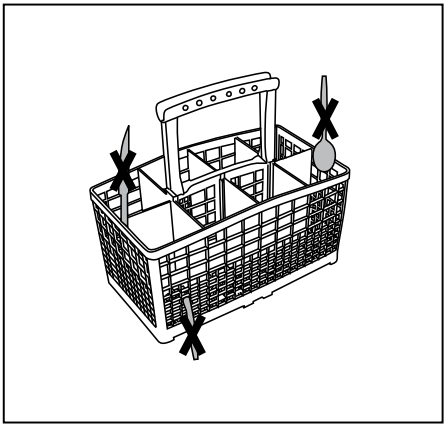

Improper Loading Of Dishware

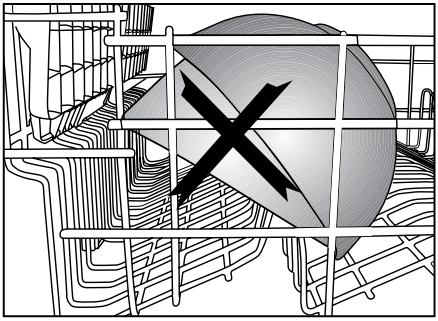

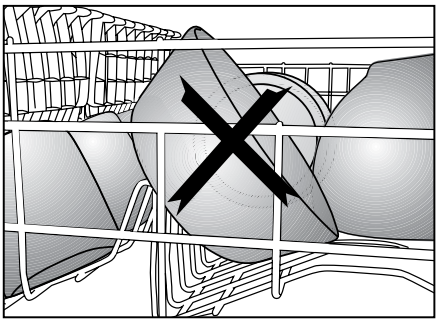

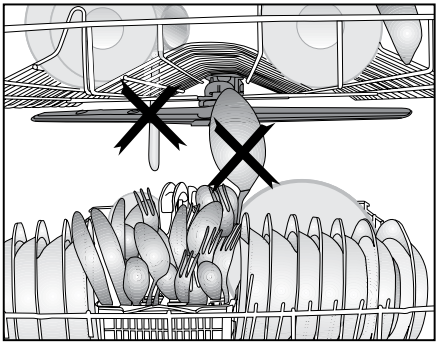

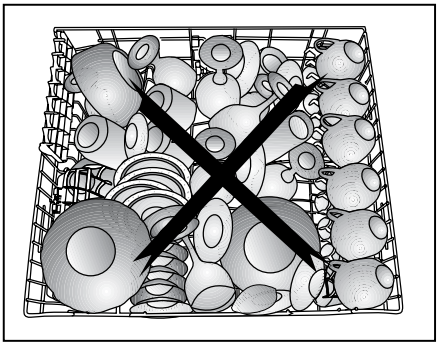

Silverware basket
(depends on the model)
Silverware basket is designed to wash your dishes such as fork, spoon and etc. in a cleaner manner.

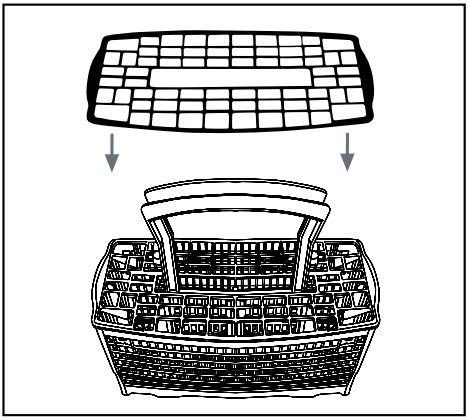

Silverware basket piece
(depends on the model)
You can place your forks, spoons and etc. to upper basket with the additional piece in the figure.

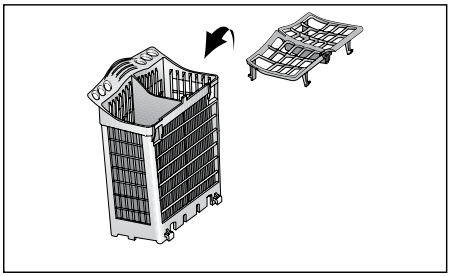

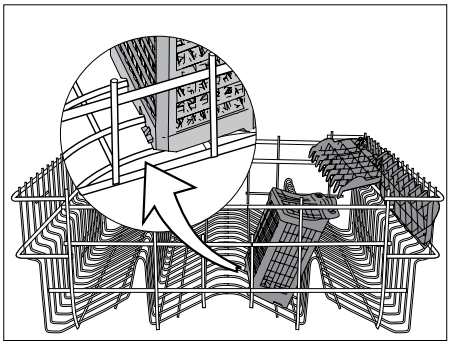

Movable silverware basket
(depends on the model)
Since the cutlery basket can be moved (A, B), you can create a wider space while placing your dishes to the lower basket and free up space for your dishes in different sizes.

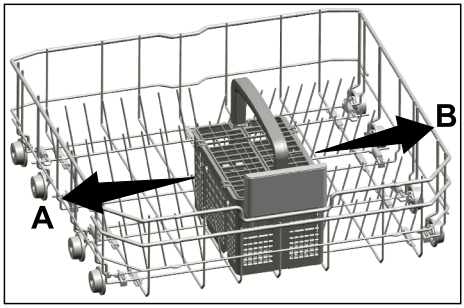

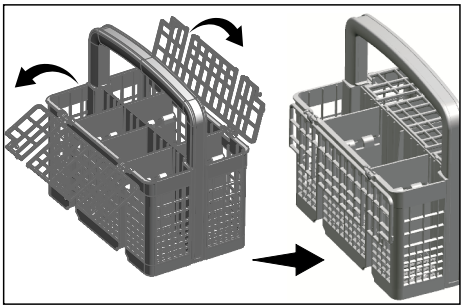

Collapsible lower basket wires (2 pieces)
(depends on the model)

The two piece foldable wires located at the lower basket of the machine are designed for an easier placement of large pieces such as pans, bowls, etc. (1, 2).
You can create larger spaces by folding each wire individually or all of them at once. Lay the foldable wires down by pressing on the latch (A).

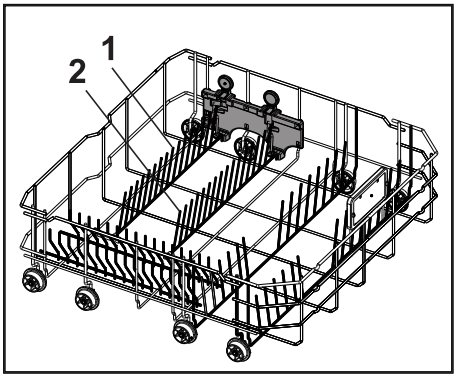

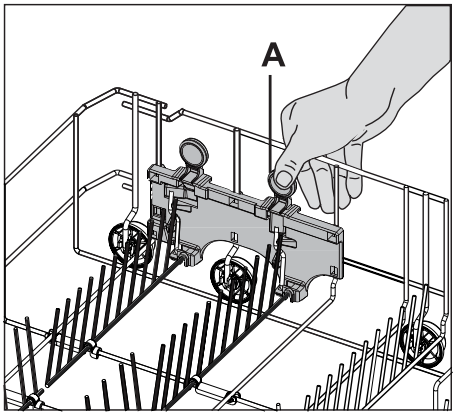

Collapsible lower basket wires (4 pieces)
(depends on the model)

The four piece foldable wires located at the lower basket of the machine are designed for an easier placement of large pieces such as pans, bowls, etc. (1, 2, 3, 4). You can create larger spaces by folding each wire individually or all of them at once. Lay the foldable wires down by pressing on the latch (A).

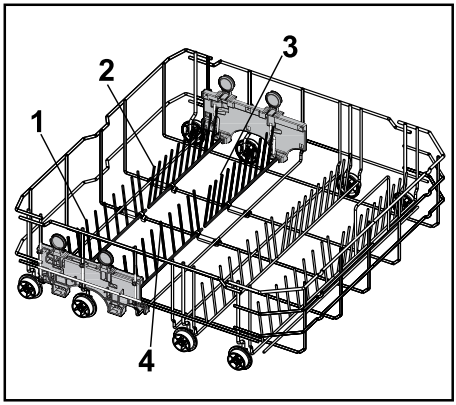

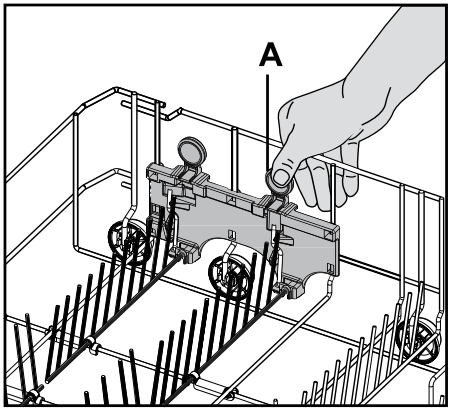

Collapsible lower basket wires (6 pieces)
(depends on the model)

The foldable wires (A) located at the lower basket of the machine are designed for an easier placement of large pieces such as pans, bowls, etc. You can create larger spaces by folding each wire individually or all them at once.

To bring the collapsible wires into horizontal position, grab the wire from mid position and push them in the directions of arrows (B) To bring the wires back to vertical position, just lift them up. Collapsible wires will click into the latch again.

ⓘ Bringing the wires to the horizontal position byholding them from the tips may cause them to bend. Therefore, it will be appropriate to bring the wires in the middle to horizontal or vertical position by holding them from their stems and pishing in the direction of arrow.

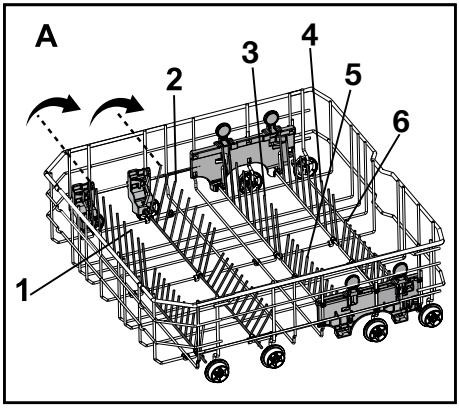

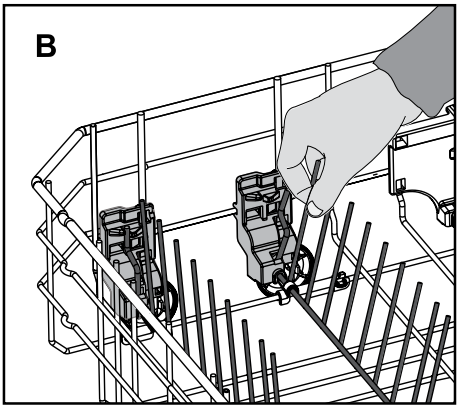

Collapsible lower basket wires (4 & 8 pieces)
(depends on the model)

The foldable wires (A) located at the lower basket of the machine are designed for an easier placement of large pieces such as pans, bowls, etc. You can create larger spaces by folding each wire individually or all them at once.

To bring the collapsible wires into horizontal position, grab the wire from mid position and push them in the directions of arrows (B) To bring the wires back to vertical position, just lift them up. Collapsible wires will click into the latch again (C).

ⓘ Bringing the wires to the horizontal position byholding them from the tips may cause them to bend. Therefore, it will be appropriate to bring the wires in the middle to horizontal or vertical position by holding them from their stems and pishing in the direction of arrow.

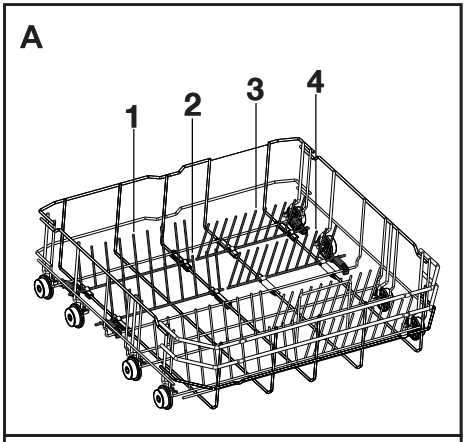

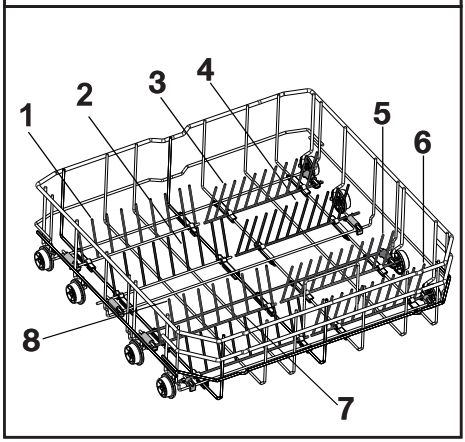

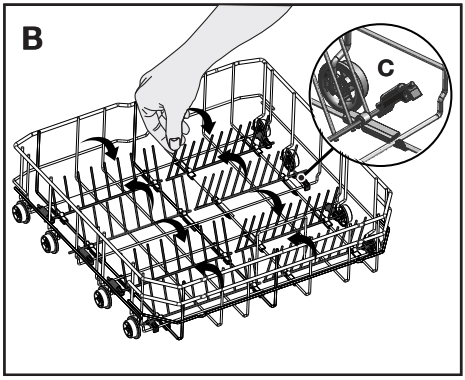

Lower basket multipurpose / height adjustable service rack

(depends on the model)

This accessory located at the lower basket of the machine allows you to easily wash pieces such as extra glasses, long ladles and bread knives.

To close the racks:

1. Fold the rack (A).
2. Slide the rack up (B).
3. Put the rack in vertical position (C).
4. Slide the rack down and lock it with the tabs (D).

ⓘ Perform the same process in reverse order to open the racks.

To adjust the height of the racks:

1. Fold the rack (E).
2. Slide the rack up (F).
3. Open the rack at the desired level (G).

⚠ Make sure that the impeller does not touch the dishes you placed on the racks.

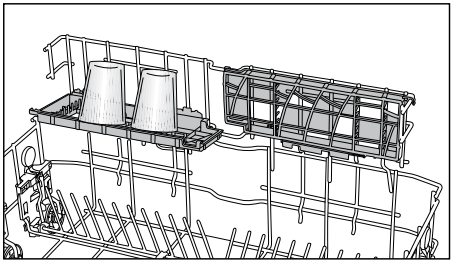

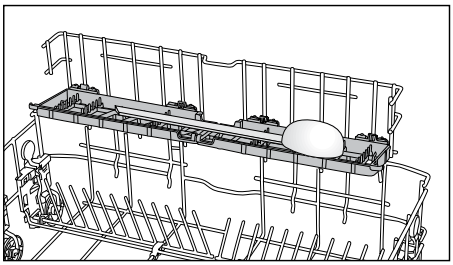

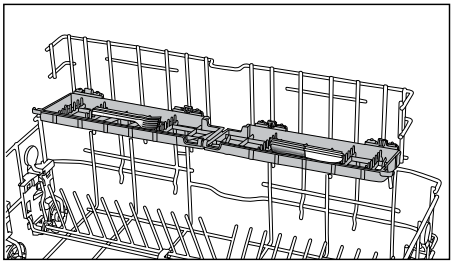

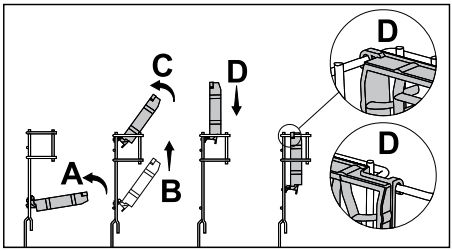

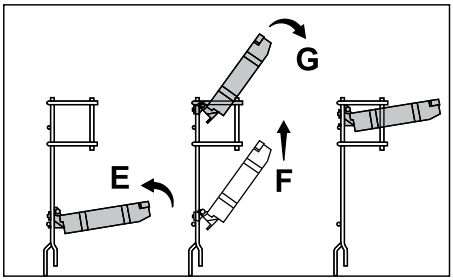

Lower Basket Glass Holder
(depends on the model)

Lower Basket Glass Holder found in the lower basket of your machine enables a safe washing for your oversized and tall glasses.

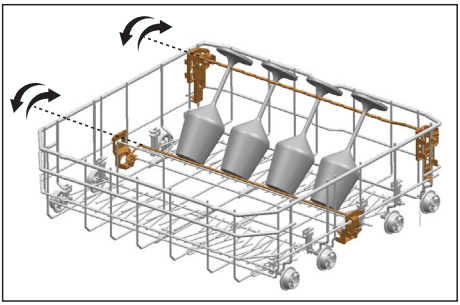

SoftTouch Accessory
(depends on the model)

The SoftTouch Accessory found in the lower basket of your machine enables a safe washing for your fragile glasses.

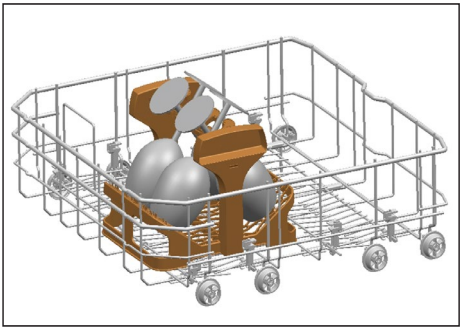

Lower basket bottle wire
(depends on the model)

The bottle wire is designed for easier washing of long pieces with wide mouths. You may take out the bottle wire from the basket when not in use by pulling it out from both sides (H).

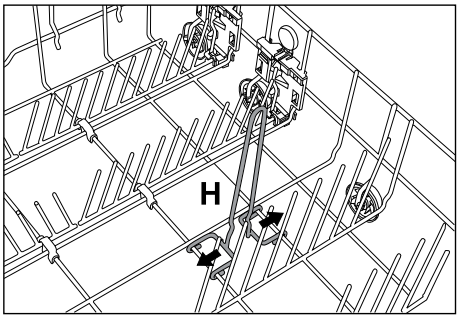

Upper basket height adjustable rack
(depends on the model)

Use the lower and upper parts of the height adjustable racks in the upper basket of the machine by sliding them down or up according to the heights of the glasses, cups or etc. (A, B, C).

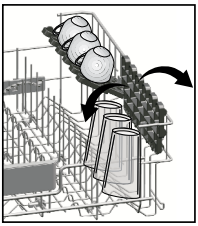

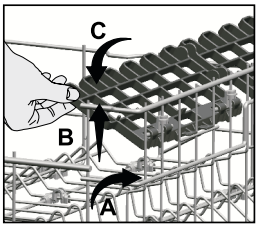

Upper basket drawer
(depends on the model)

You can easily place additional desert spoons, small forks and knives into the basket drawer installed to the upper basket of your machine.

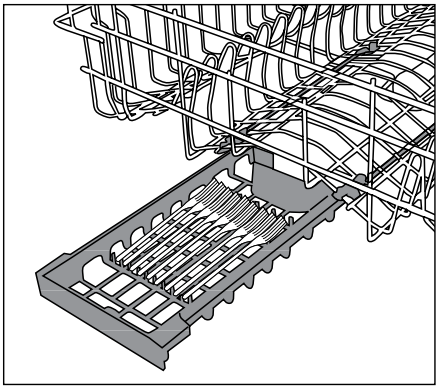

Upper basket glass support piece
(depends on the model)

When placing long stemmed glasses or wine glasses, do not lean them against other pieces but to the edge of the basket or to the rack (1). Do not lean long glasses against each other. They can move and get damaged during washing.

If you wish to place large-volume pieces on the upper basket, release the tab of the glass support piece from the upper basket wire it is hooked to. Thus, you can obtain a wider space.

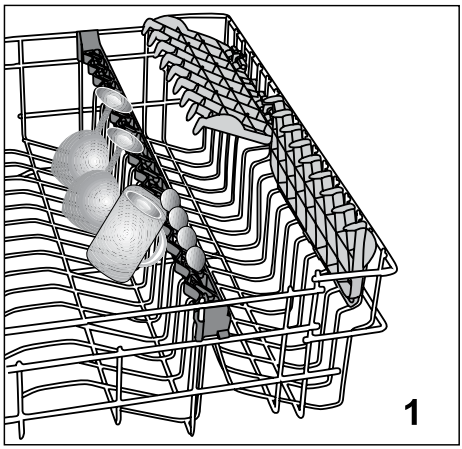

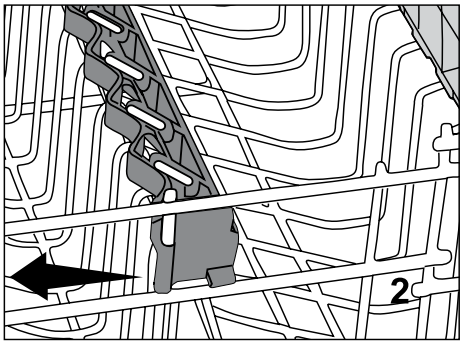

Collapsible upper basket wires
(depends on the model)

To bring the collapsable wires on the upper basket of the machine into horizontal position, press on the latch (1). Place your larger dishes into the area created (2). To bring the wires back to vertical position, just lift them up.

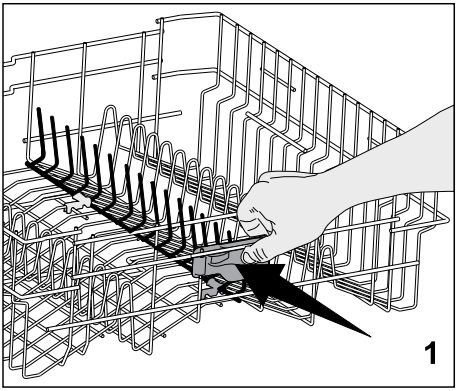

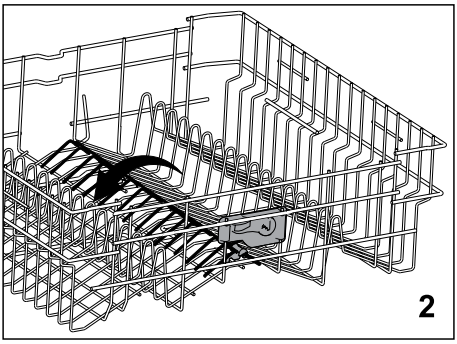

Upper basket glass support piece
(depends on the model)

When placing long stemmed glasses or wine glasses, do not lean them against other pieces but to the edge of the basket or to the rack (1). Do not lean long glasses against each other. They can move and get damaged during washing.

If you wish to place large-volume pieces on the upper basket, release the tab of the glass support piece from the upper basket wire it is hooked to. Thus, you can obtain a wider space.

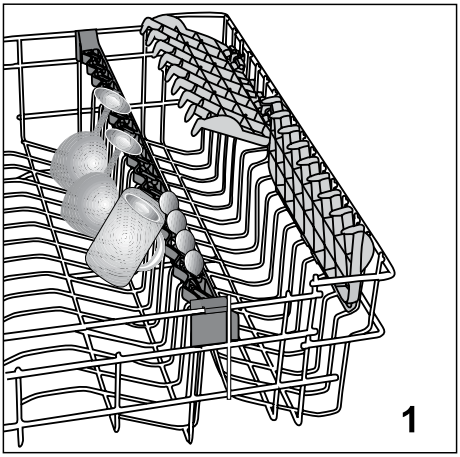

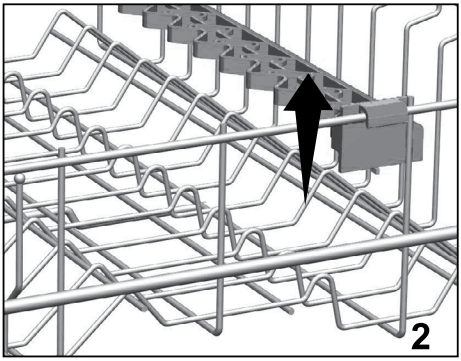

Collapsible upper basket wires
(depends on the model)

There are collapsible wires on the upper basket of the machine that you can lay down when you need a larger room for big dishes.
On your upper basket there are two types of collapsible wires namely, fully laid system (A) and gradually laid system (B). To bring the collapsible wires into horizontal position, push the wires in the direction of the arrow by holding them from the middle. You can place your larger dishes into the area created. To bring the wires back to vertical position, just lift them up. Collapsible wires will click into the latch again.

ⓘ Holding the wires from ends to put them in lying position may cause the wires to bend. For this reason, it will be appropriate to hold the wires in the middle from their bottoms and to push in the direciton of the arrow to lay down or bring them to vertical position.

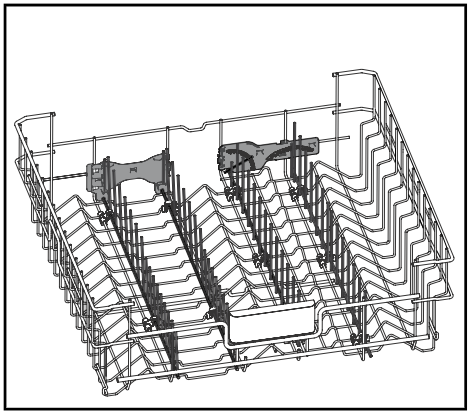

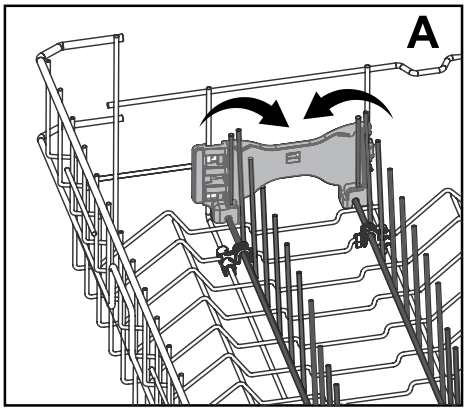

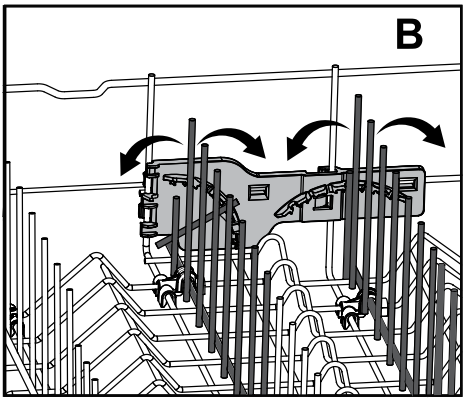

Adjusting the height of loaded upper basket
(depends on the model)

Basket adjustment mechanism on the upper basket of the machine is designed to allow you create wider areas in the upper or lover section of the machine based on your requirements by adjusting the height of the loaded basket in up or down directions without removing it from the machine.

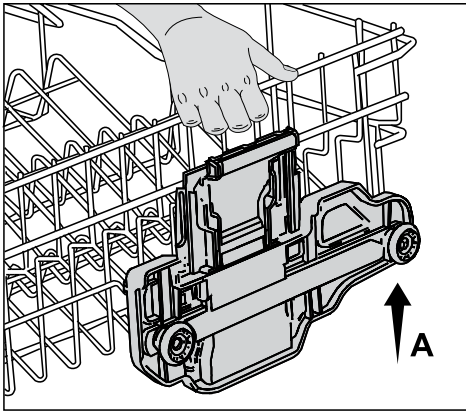

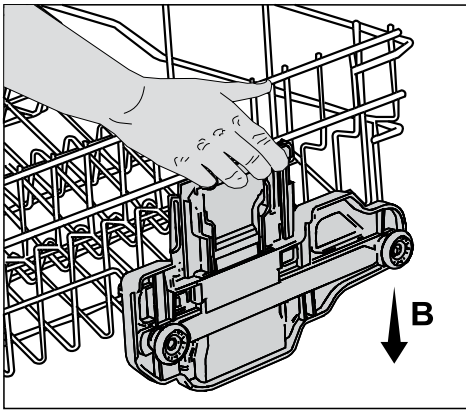

To raise the basket:

1. Grab one of the upper basket wires (right or left) and lift it up (A).
2. Repeat the same process to raise the other side of the basket.
3. Make sure that both sides of the basket height adjustment mechanism are at the same level (down or up).

To lower the basket:

1. Press the latch on the basket adjustment mechanism (right or left) to lower the basket (B).
2. Repeat the same process to lower the other side of the basket.
3. Make sure that both sides of the basket height adjustment mechanism are at the same level (down or up).

Adjusting the height of loaded upper basket
(depends on the model)

Basket adjustment mechanism on the upper basket of the machine is designed to allow you create wider areas in the upper or lover section of the machine based on your requirements by adjusting the height of the loaded basket in up or down directions without removing it from the machine.

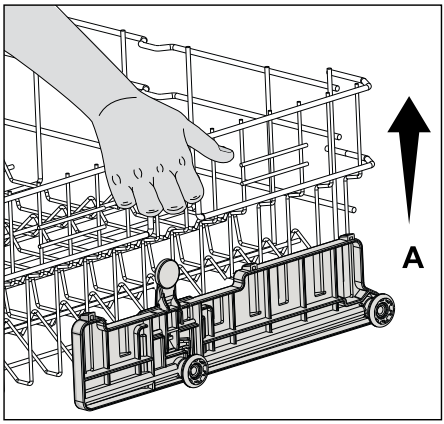

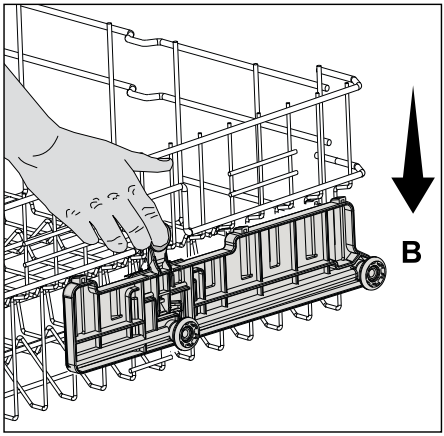

To raise the basket:

1. Grab one of the upper basket wires (right or left) and lift it up (A).
2. Repeat the same process to raise the other side of the basket.
3. Make sure that both sides of the basket height adjustment mechanism are at the same level (down or up).

To lower the basket:

1. Press the latch on the basket adjustment mechanism (right or left) to lower the basket (B).
2. Repeat the same process to lower the other side of the basket.
3. Make sure that both sides of the basket height adjustment mechanism are at the same level (down or up).

Adjusting the height of empty upper basket
(depends on the model)

You can adjust the height of the upper basket according to the size of the dish to be washed. Use basket rollers to change the basket height.

1. Turn the stoppers on the ends of the upper basket rails by turning them aside (A).
2. Take the basket out (B).
3. Change the position of the rollers, place the basket into the rail and close the stoppers (C).

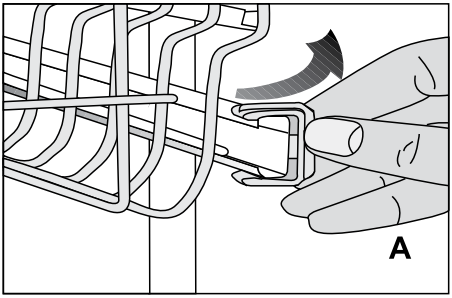

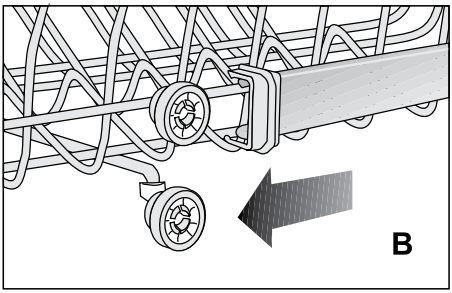

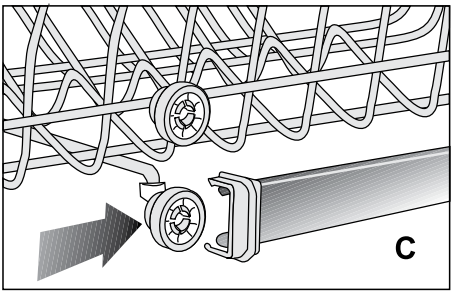

Ceiling silverware basket

Ceiling silverware basket is designed to wash small items or items that are too long to fit into the lower silverware basket.

Since it can be removed from the machine easily, it allows taking out the dishes from the machine together with the basket after they are washed. It is compatible with all standard drawer sizes and can be placed into kitchen drawers and racks. Thus, there is no need to take the dishes out of the basket and lay them anymore.

Removing and installing the ceiling silverware basket:

1. Pull the basket towards yourself.
2. Turn the rail caps (A) outwards and pull them towards yourself to remove them.
3. Raise the basket upwards and take it out the machine.
4. Pull the carrier piece towards yourself to remove it from the rails.
5. Replace the rail caps and push the rails back into their places.
6. Turn the rails inside the machine outwards (B) and seat them properly in their places.

ⓘ In order to install the ceiling silverware basket into its place, repeat the removal process in reverse order.

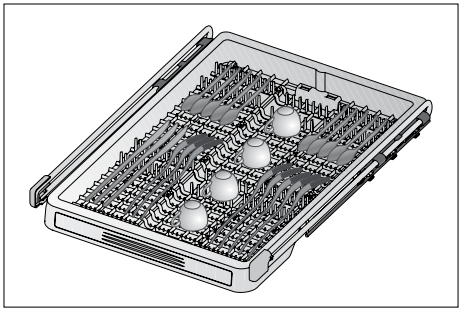

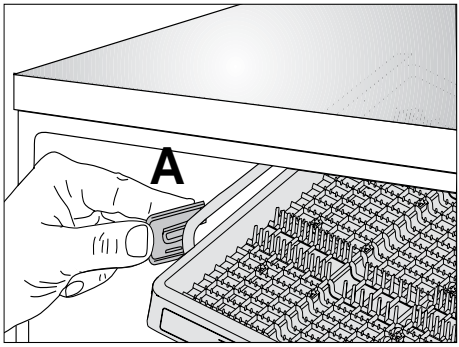

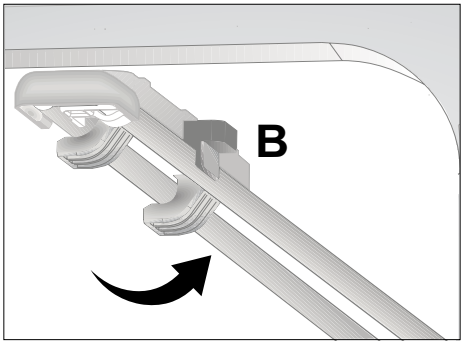

5 Operating the product

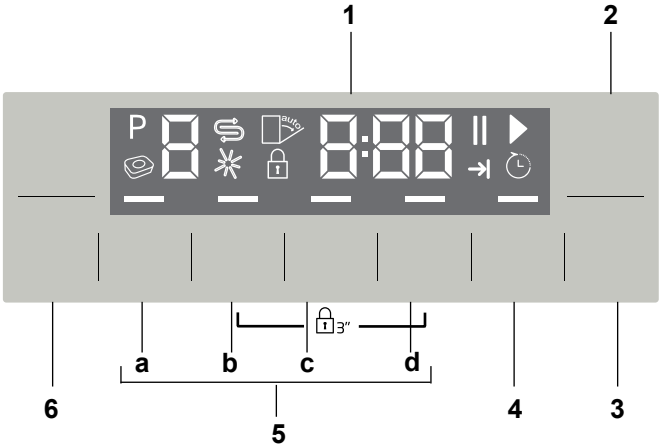

1. Display
2. On/Off key
3. Start/Pause/Cancel key
4. Time Delay key
5. Function keys
   a) Half Load Function
   b) Fast+ Function
   c) AquaIntense Function
   d) IonGuard Function
6. Program Selection keys

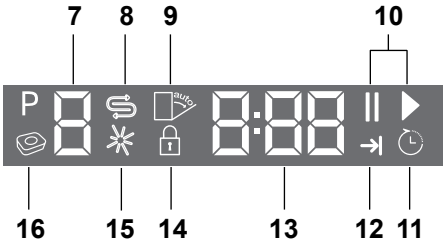

7. Programme indicator
8. Salt (⊜) indicator
9. (Not in use)
10. Start (▶) / Pause (❚❚) indicator
11. Time Delay indicator
12. End of Programme indicator
13. Screen information line
14. Child Lock indicator
15. Rinse aid (✳) indicator
16. (Not in use)

Keys

On / Off key

It is used to turn on or off the machine.
Machine will turn on with economy programme in On mode and the number of the economy programme will appear on the programme indicator. In Of position, indicators on the display will turn off.

Start / Pause / Cancel key

It is used to start, pause or cancel a selected programme or function.

Program Selection keys

They are used to select the washing programme you determined from the table of "Programme data and average consumption values".

Delayed Start key

It should be pressed to make the time delay settings.

Preparing the machine

1. Open the door of the dishwasher.
2. Place the dishes in accordance with the instructions in the user manual.
3. Make sure that the upper and lower impellers rotate freely.
4. Put adequate amount of detergent into the detergent dispenser.
5. Check if the Salt and Rinse Aid indicators light and add salt and/or rinse aid if needed.
6. Close the door of the dishwasher.

Programme selection

1. Press the On/Off button to turn on your machine.
2. Refer to the table of "Programme data and average consumption values" to determine a washing programme suitable for your dishes.
3. Press Programme Selection keys until the number of the programme you selected appears on the Programme indicator.
   Use P+ to switch to the next programme, and P- to switch to the previous one.

Programme Table

Programme number	P0	1 Reference*	2	3	4	5	6	7	8	9
Programme name	**InnerClean**	**eco**	**Auto**	**AquaFlex**	**Baby Protect**	**Intensive**	**Quick & Clean**	**GlassCare**	**Mini 30'**	**Prewash**
Cleaning temperature	-	50°C	40°C- 65°C	-	70°C	70°C	70°C	40°C	35°C	-
Degree of Soiling	This programme is recommended to be operated on each 1-2 months for machine cleaning and necessary hygiene. The programme should be operated while the machine is empty. In order to achieve an efficient result, it is recommended to use together with special machine cleaning agents.	Most economical washing program for the medium soiled daily dishes that are kept waiting.	Determines the soiling degree of the dishes and sets the temperature and amount of the washing water as well as the washing time automatically. Suitable for all types of dishes.	It is the most suitable washing programme for daily mixed dishes including plastic items. While delicate glass items are washed in the upper basket, pans and trays can be washed in the lower basket.	Suitable for heavily soiled dishes, pots and pans.	It is the daily washing programme to wash the normally soiled left dishes in the most silent way.	Daily washing program at which the medium soiled dishes that are kept waiting are cleaned in the fastest way.	Special program for gentle cleaning of delicate glassware.	Suitable for lightly soiled daily dishes that are scraped or pre-cleaned.	Suitable for removing the remnants on the soiled dishes that will be kept waiting in the machine for a few days, and thus, for preventing the bad odor buildup.
		Medium	Medium to high	High	High	Medium	Medium	Few	Few	-
Detergents A=25 cm³/15 cm³ B=5 cm³		**A+B**	**A**	**A+B**	**A+B**	**A+B**	**A+B**	**A**	**A**	**-**
Programme sequence (without options)		Pre-wash - Wash - Cold rinse - Hot Rinse - Dry - End	The programme sequence is adjusted to the amount of soiling	Pre-wash - Wash - Cold rinse - Hot Rinse - Hot Rinse - Dry - End	Pre-wash - Wash - Cold rinse - Hot Rinse - Dry - End	Wash - Cold rinse - Hot Rinse - Dry - End	Wash - Cold rinse - Hot Rinse - Dry - End	Pre-wash - Wash - Cold rinse - Hot Rinse - Dry - End	Wash - Cold rinse - Hot Rinse - End	Pre-wash - End
Duration (min)	75	238	110-210	189	135	156	58	102	30	15
Water (l)	14,4	10	10,2-14,4	18,6	17,6	16,2	10,2	13	10,4	4
Energy (kWh)	0,7	0,82	0,90-1,45	1,36	1,68	1,43	1,3	0,92	0,8	-

The consumption values shown in the table were determined under standard conditions. Differences may therefore occur under practical conditions.
* Reference programme for testing institutes The tests in accordance with EN 50242 must be carried out with a full water softener salt dispenser and a full rinse aid reservoir, and using the test programme.

Auxiliary functions

Washing programmes of your dishwasher are designed to obtain the best cleaning effect, considering the type of the soil, soiling degree and properties of the dishes to be washed.
Auxiliary functions are provided in order to enable you to save time, water and energy and to perform a more comfortable washing with conditions specific to you.

ⓘ Auxiliary functions may cause changes in the programme duration.

ⓘ Auxiliary functions are not suitable for all washing programs. Indicator of the auxiliary function that is not compatible with the programme will not be active.

To add auxiliary function to the programme:

1. Select the desired washing programme by pressing the programme selection key.
2. In the selected washing programme, if auxiliary function is selected, its symbol will be displayed on the screen. If the function button is pressed again the symbol will disappear and selection is cancelled.
3. Selection will be cancelled when you press the function key again.

Half Load function

It is used to operate the machine without loading it completely.
It is used to operate the machine without loading it completely.

1. Load your dishes in the machine as you like.
2. Turn the machine on with On/Off key.
3. Select the desired programme and press the Half Load key. The Half Load indicator will light on the display in the Function Selected indicator.
4. Start the program by pressing Start / Pause / Cancel key.

ⓘ With the Half Load function you can save both water and power while using the lower and upper baskets of the machine.

Fast+ Function

It shortens the time of the washing cycle selected and decreases water consumption by enabling washing under higher pressure.

AquaIntense Function

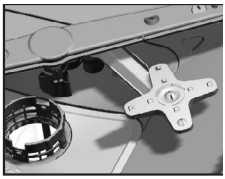

AquaIntense impeller located under the lower impeller helps washing your heavily soiled dishes places in the right side of the lower basket. It will give better results to place the most soiled dish to the right front side.

ⓘ Do not try to remove the AquaIntense impeller!

IonGuard Function

Press IonGuard function button on the panel to activate the IonGuard function. While the function is active, the system is activated intermittently and prevents formation of bad odors due to putrefication. If this function is selected, it will be activated while the product is turned off and the IonGuard indicator on the panel will flash, a ventilation noise can be heard, this is

normal. Until the function selection is disabled, system is automatically activated intermittently.

Automatic Detergent Detection Feature

The product has a feature to automatically detect the type of the detergent and adjust the washing programme and drying system to the best performance. If special tablet detergent is used, the programme duration can be extended by 20 minutes in order to optimize the washing and drying performance.

To deactivate:

1. After turning on the machine, press Time Delay and P+ keys simultaneously. Keep them pressed until the countdown 3, 2, 1 is completed on the display.
2. Press P+ key to activate the a: option. Automatic detergent detection feature is disabled at “a:0” option and enabled at "a:1" option. Set the desired option by pressing the Time Delay key.
3. Turn off the machine with On/Off key to save the changes.

Interior Lighting (Depends on the model)

Some models have interior lighting to illuminate the interior when the door is opened.

Changing the interior lighting setting

1. After turning on the machine, press Time Delay and P/P+ keys simultaneously. Continue to press until the countdown 3, 2, 1 is completed on the display.
2. Press P/P+ key to activate the L: option. The interior lighting is turned off at "L:0" option and turned on at "L:1" option. Set the desired option with the Time Delay key.
3. Turn off the machine with On/Off key to save the changes.

Floor illumination Warning to show that machine is in washing phase (depends on the model)

Your machine reflects a light to the floor during the washing process. This light turns off after the washing process is complete.

ⓘ Floor illumination is activated automatically when the washing programme starts and remains lit until the end of the programme.

ⓘ Floor illumination cannot be cancelled by the user.

InnerClean

This programme is recommended to be operated on each 1-2 months for machine cleaning and necessary hygiene. The programme should be operated while the machine is empty. In order to achieve an efficient result, it is recommended to use together with special machine cleaning agents.

⚠ Do not use Machine Cleaning programme to clean dishes. As it operates in high temperatures, it is harmful for the dishes.

Programming the washing time

Time Delay

If an economical electricity tariff is applied in your region, you can use the Time Delay function to wash your dishes during appropriate hours. You can delay the start of the selected program until 24 hours.

Time Delay cannot be set after the programme starts.

1. Press the Time Delay function key after selecting the washing programme and other auxiliary functions.
2. Once you press the Time Delay key, Display Information Line will show "0:30" and Time Delay indicator will start flashing.
3. Set the desired time by pressing the Time Delay key. Time will increase with increments of 30 minutes up to 6 hours and after that in 1 hour increments up to 24 hours every time you press the key.
4. Press Start / Pause / Cancel key to start countdown for the Time Delay. Time Delay indicator and Start / Pause indicator will light continuously until the end of the period. Time Delay is displayed on the Display Information Line. Selected programme will start as soon as the countdown is over.

Changing the settings while Time Delay function is enabled

While the Time Delay function is activated, you cannot make changes in the washing programme, auxiliary functions or the duration of delay time.

ⓘ Programme and auxiliary functions cannot be set/changed after the programme has started.

To cancel the Time Delay function

1. Press and hold Start / Pause / Cancel key for 3 seconds.
2. When the Start / Pause / Cancel key is pressed and hold, "3", "2", "1" appear on the Display Information Line. Time Delay indicator will turn off at the end of the cancellation process and delaying process is cancelled.

ⓘ You can select and start a new programme following the cancellation of Time Delay function.

ⓘ Time Delay function can not be set after the programme starts.

Starting the programme

To start your machine after selecting the programme and auxiliary functions, press Start / Pause / Cancel key.

Once the programme starts a tune is played and the estimated time remained to the end of the programme will appear on the Display Information Line. Start / Pause / Cancel indicator starts lighting continuously.

ⓘ Your machine performs water softening depending on the hardness level of the supply water. Remaining time displayed towards the end in some programmes can be different from the time indicated at the beginning due to this process. The total time can also change while the programme is running depending on the ambient temperature where your machine is installed, temperature of the supply water and amount of the dishes.

ⓘ Pay attention not to open the door of the machine when it is running. Stop the machine by pressing Start / Pause / Cancel key if you have to open the door. Then, open the door of the machine. There may be a rush of vapour when you open the door of your machine; be careful. Close the door of your machine and press Start/Pause/ Cancel key again. Programme will resume running.

ⓘ The machine will remain silent in pause mode for some time in order to remove the water in the machine and on the dishes completely and to have the water softener cleaned, and then it will resume running in drying mode.

Child (Key) Lock

You may prevent other people from interrupting and changing the programme cycle and time delay while the machine is running.

To activate the Child Lock:

1. Pres Child (Key) Lock keys simultaneously and hold for 3 seconds.
2. "3", "2", "1" is displayed on Display Information Line and key lock is activated.

ⓘ Child Lock prevents the selected programme or functions from being changed and disables the Start / Pause / Cancel key.

ⓘ Child Lock does not lock the door of the machine.

ⓘ If you turn your machine off by using On/Off key at the end of the programme, the Child Lock will be deactivated automatically.

ⓘ For energy saving, the product is automatically turned off following the completion of the programme or if the programme is not started.

To deactivate the Child Lock:

1. Pres Child (Key) Lock keys simultaneously and hold for 3 seconds.
2. "3", "2", "1" is displayed on Display Information Line and key lock is cancelled.

Cancelling the programme

1. Press Start/Pause/Cancel key for 3 seconds to cancel the programme.
2. Release the key when the Start / Pause indicator starts flashing. For a couple of minutes the machine will fulfill the necessary operations required to cancel the programme.

ⓘ There might be residues of detergent or rinse aid left in the machine and / or on the pieces being washed depending on the step the programme you have cancelled was in.

Salt indicator (🧂)

Please check the salt indicator on the display to see whether there is adequate amount of softening salt in the dishwasher or not. You need to refill the salt reservoir with salt whenever salt warning indicator appears on the display of your machine.

ⓘ Adjusting the water hardness level is explained in Water Softening System section.

Rinse Aid indicator (✳)

Please check the rinse aid indicator on the display to see whether there is adequate amount of rinse aid in the dishwasher or not. You need to refill the rinse aid reservoir with rinse aid whenever rinse aid warning indicator appears on the display of your machine.

End of programme

End of Programme indicator will light up once the washing programme is over.

1. Press the On/Off button to turn off your machine.
2. Close the tap.
3. Unplug the machine from the socket.

- For energy saving, the product is automatically turned off following the completion of the programme or if the programme is not started.
- Leave your dishes in the machine for about 15 minutes to cool down after they are washed. Your dishes will dry in a shorter time if you leave the door of your machine ajar during this period. This process will increase the drying effectiveness of your machine.

Water cut-off warning

If mains water is cut or water inlet tap is turned off the machine cannot take water in and E:02 icon will flash on the programme indicator. As long as the problem continues, washing programme is paused and the water inlet is checked regularly by the machine; when the water is restored E:02 icon will disappear after a while and the washing programme resumes.

Overflowing warning

If the machine intakes too much water or there is leakage at any of the components then the machine will detect this and E:01 icon will flash on the Programme indicator. As long as the overflowing continues safety algorithm will be active and try to discharge the water. If overflowing stops and safety is assured, E:01 icon will disappear. If E:01 does not disappear, there is a permanent fault. In this case the authorised service should be contacted.

6 Maintenance and cleaning

Service life of the product extends and frequently faced problems decrease if it is cleaned at regular intervals.

⚠ Unplug the product and turn off the tap before attempting any cleaning procedures.

ⓘ Do not use abrasive substances for cleaning.

ⓘ Clean the filters and impellers at least once a week.

Cleaning the outer surface of the product

Clean the outer surface and door gaskets of the product gently with a mild cleaning material and damp cloth. Wipe the control panel only with a damp cloth.

Cleaning the interior of the machine

- Clean the interior of the machine and the tank by running a prewash programme without detergent or a long washing programme with detergent based on the degree of soiling.
- If water has remained in the machine, drain the water by performing the procedures under the topic "Canceling a programme". If the water cannot be discharged, clean any leftover deposits that have piled up in the bottom of the machine, blocking the water path.

Cleaning the filters

Clean the filters at least once a week in order for the machine operates efficiently. Check if food residues are left on the filters. If there are food residues on filters, take them out and clean well under running water.

1. Turn the micro filter (1) and coarse filter (2) assembly counter clockwise and pull it out from its seating (A).

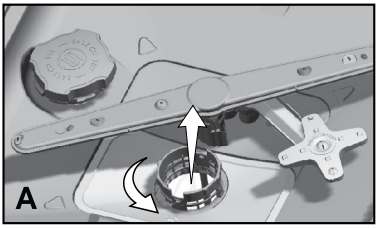

2. Pull out the metal / plastic filter (3) (B).

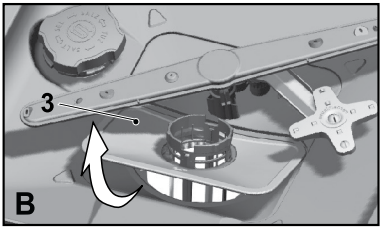

3. Press the two pawls on the coarse filter inwards and separate the coarse filter from the assembly (C).

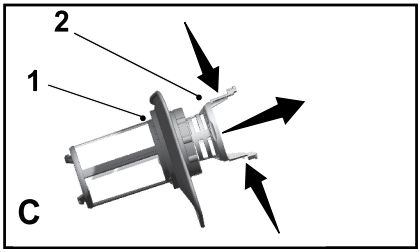

4. Clean all three filters under tap water by means of a brush.

5. Replace the metal/plastic filter.
6. Place the coarse filter into the microfilter. Make sure that it is properly seated. Turn the coarse filter clockwise until a “click” sound is heard.

⚠ Do not use the dishwasher without filter.

ⓘ Incorrect placement of the filters will reduce washing efficiency.

Cleaning the hose filter

Damages on the machine that may be caused by impurities coming from the urban supply water or your own water installation (such as sand, dirt, rust, etc.) can be prevented by means of the filter attached to the water inlet hose. Check the filter and the hose regularly and clean them if necessary.

1. Turn off the tap and remove the hose.
2. After taking out the filter, clean it under running tap water.
3. Place the cleaned filter back to its seat in the hose.
4. Install the hose to tap.

(depends on the model)

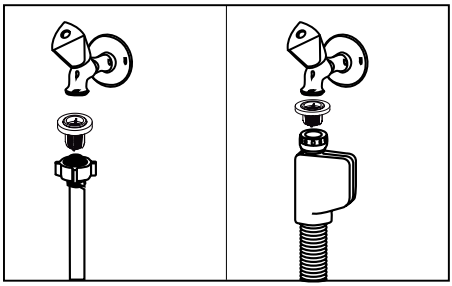

Cleaning the impellers

Clean the impellers at least once a week in order for the machine operates efficiently.

Lower impeller

Check if the holes on the lower impeller (1) are clogged. If they are clogged, remove and clean the impeller. Pull the lower impeller up to remove it (A, B).

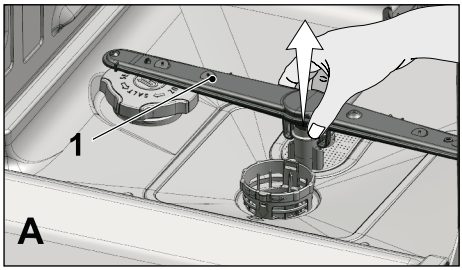

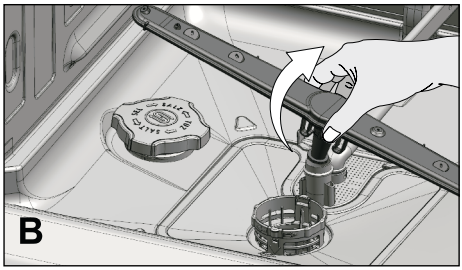

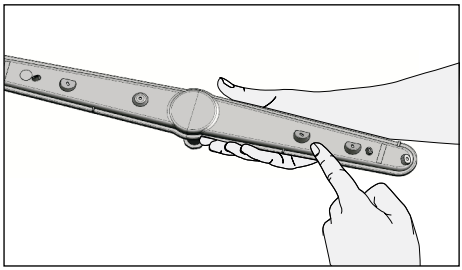

Upper impeller
Check if the holes on the upper impeller (2) are clogged. If they are clogged, remove and clean the impeller. Turn its nut to left to remove the upper impeller (C, D).
Make sure that the nut is tightened well when installing the upper impeller.

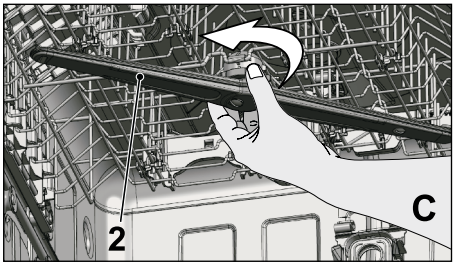

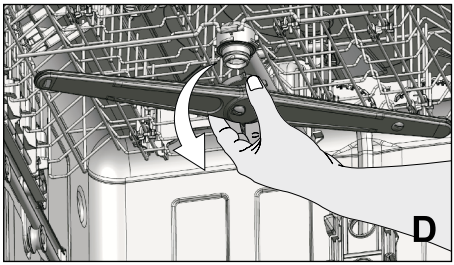

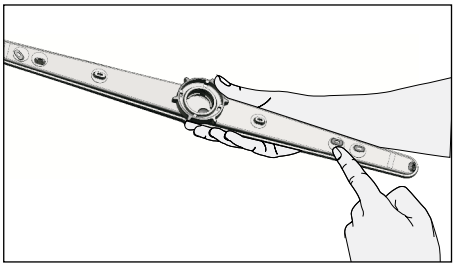

Ceiling impeller
Check if the holes on the top ceiling impeller (3) of your machine are clogged. If they are clogged, remove and clean.

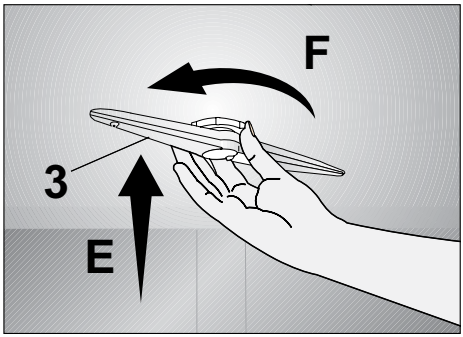

To remove the impeller, slightly (E) push it upwards and then turn clockwise (F).
To install the impeller, seat it into its slot, push slightly upwards and turn it anticlockwise until it is securely fitted. When the impeller is released, check if it rotates without any obstruction.

7 Troubleshooting

Machine does not start.

- Power cable is unplugged. > > > *Check if the power cable is plugged in.*
- Fuse is blown. > > > *Check the fuses in your house.*
- Water is cut. > > > *Make sure that the water inlet tap is open.*
- Door of the machine is open. > > > *Make sure that you have closed the door of the machine.*
- On / Off button is not pressed. > > > *Make sure that you have turned on the machine by pressing the On / Off button.*

Dishes are not washed clean

- Dishes are not placed orderly in the machine. > > > *Load the dishes as described in the user manual.*
- Selected programme is unsuitable. > > > *Select a programme with a higher temperature and cycle time.*
- Impellers are stuck. > > > *Prior to starting the programme, turn the lower and upper impellers by hand to make sure that they rotate freely.*
- Impeller holes are clogged. > > > *Lower and upper impeller holes might be clogged with food remnants such as lemon pips. Clean the impellers regularly as illustrated in section "Cleaning and Care".*
- Filters are clogged. > > > *Check if the filter system is clean. Clean the filter system regularly as illustrated in section "Cleaning and Care".*
- Filters are installed incorrectly. > > > *Check the filter system and make sure that it is installed correctly.*
- Baskets are overloaded. > > > *Do not overload the baskets in excess of their capacity.*
- Detergent is stored under unsuitable conditions. > > > *If you are using powder detergent, do not store the detergent package in humid places. Keep it in a closed container if possible. For ease-of-storing, we recommend you to use tablet detergents.*
- Detergent is not sufficient. > > > *If you are using powder detergent, adjust the amount of detergent according to the soiling degree of your dishes and/or programme definitions. We recommend you to use tablet detergents for optimum results.*
- Rinse aid is not sufficient. > > > *Check the rinse aid indicator and add rinse aid if necessary. Increase the rinse aid setting if there is enough amount of rinse aid in the machine.*
- Detergent dispenser lid is left open. > > > *Make sure that the detergent dispenser lid is closed tightly after adding detergent.*

Dishes are not dry at the end of cycle

- Dishes are not placed orderly in the machine. >>> *Place your dishes in a way that no water will accumulate in them.*
- Rinse aid is not sufficient. >>> *Check the rinse aid indicator and add rinse aid if necessary. Increase the rinse aid setting if there is enough amount of rinse aid in the machine.*
- Machine is unloaded right after the programme is over. >>> *Do not unload your machine right after washing process is completed. Slightly open the door and wait for evacuation of the steam inside for a while. Unload the dishes after the pieces cool down to a touchable level. Start unloading process from the lower basket. Thus, dropping of water remained on a piece at upper basket onto the pieces at lower basket is prevented.*
- Selected programme is unsuitable. >>> *Since rinsing temperature is low at programmes with short duration, drying performance will also be low. Select programmes with longer duration for a higher drying performance.*
- Surface quality of the kitchen utensils is deteriorated. >>> *Desired washing performance can not be obtained at kitchen utensils with deteriorated surfaces and it is not suitable to use such utensils in terms of hygiene as well. Also, water can not flow easily on deteriorated surfaces. It is not recommended to wash such kitchen utensils in dishwasher.*

ⓘ It is normal that drying complaints can be experienced with Teflon kitchen utensils. It is associated with the structure of Teflon. Since the surface tensions of Teflon and water are different, water droplets will remain as beads on the Teflon surface.

Tea, cafe or lipstick stains remain on dishes.

- Selected programme is unsuitable. >>> *Select a programme with a higher temperature and cycle time.*
- Surface quality of the kitchen utensils is deteriorated. >>> *Tea and cafe stains or other dye spots may not be cleaned in dishwasher when they have penetrated in deteriorated surfaces. Desired washing performance can not be obtained at kitchen utensils with deteriorated surfaces and it is not suitable to use such utensils in terms of hygiene as well. It is not recommended to wash such kitchen utensils in dishwasher.*
- Detergent is stored under unsuitable conditions. >>> *If you are using powder detergent, do not store the detergent package in humid places. Keep it in a closed container if possible. For ease-of-storing, we recommend you to use tablet detergents.*

Lime traces remain on dishes and glassware gains a misty appearance

- Rinse aid is not sufficient. > > > *Check the rinse aid indicator and add rinse aid if necessary. Increase the rinse aid setting if there is enough amount of rinse aid in the machine.*
- Water hardness setting is low or salt level is insufficient > > > *Measure the hardness of the supply water appropriately and check the water hardness setting.*
- Salt leakage exists. > > > *Pay attention not to spill salt around the salt filling hole while adding salt. Make sure that the salt reservoir lid is tightly closed after finishing the filling process. Run the prewash programme to remove the salt that spilled inside the machine. Since the salt granules that will remain under the lid will dissolve during prewash, causing the lid loosen, check the lid once again at the end of the programme.*

There is a different odour in the machine

ⓘ A new machine has a peculiar odour. It will fade out after a couple of washing.

- Filters are clogged. > > > *Check if the filter system is clean. Clean the filter system regularly as illustrated in section "Cleaning and Care".*
- Dirty dishes are kept in dishwasher for 2-3 days. > > > *If you are not going to start the machine right after you have put the dishes into it, remove the remnants on the dishes and run the Prewash programme without detergent every 2 days. In such cases, do not close the door of the machine completely in order to avoid odour build up in machine. You can also use commercially available odour removers or machine cleaners.*

Rust, discoloration or surface deterioration occurs on dishes

- Salt leakage exists. > > > *Salt may cause deterioration and oxidation on metal surfaces. Pay attention not to spill salt around the salt filling hole while adding salt. Make sure that the salt reservoir lid is tightly closed after finishing the filling process. Run the prewash programme to remove the salt that spilled inside the machine. Since the salt granules that will remain under the lid will dissolve during prewash, causing the lid loosen, check the lid once again at the end of the programme.*
- Salty food remnants have remained on dishes for a long time. > > > *If silverware soiled with such foods will be kept waiting in machine, dirt must be removed by prewash or dishes must be washed without being kept waiting.*
- Electric installation is not grounded. > > > *Check if your machine is connected to the actual grounding line. Otherwise, the static electric created in the product causes arcs on the surfaces of metal items creating pores, removing the protective cover on the surface and causing discoloration.*
- Intensive cleansers such as bleaches are used. > > > *Protective cover on metal surfaces gets damaged and looses its efficiency in time when it gets in contact with cleansers such as bleach. Do not wash your dishes with bleach.*
- Metal items particularly such as knives are used for purposes other then their intended uses. > > > *Protective cover on the edges of knives may get damaged when they are used for purposes such as opening cans. Do not use metal kitchen utensils out of their intended uses.*
- Silverware are made of low quality stainless steel. > > > *Corrosion on such items is inevitable; they should not be washed in dishwashers.*
- Kitchen utensils that are already corroded are washed in dishwasher. > > > *Rust on a corroded item can migrate to other stainless steel surfaces and cause corrosion on those surfaces as well. Such items should not be washed in dishwashers.*

Detergent remains in detergent dispenser.

- Detergent dispenser was damp when adding detergent. > > > *Make sure that the detergent dispenser is dried well prior to filling it with detergent.*
- Detergent is added long before the washing process. > > > *Pay attention to add detergent shortly before start-up of the washing.*
- Opening of the detergent dispenser lid is prevented during washing. > > > *Place the dishes in a way that will not prevent the detergent dispenser lid from opening and the water going into the machine from impellers.*
- Detergent is stored under unsuitable conditions. > > > *If you are using powder detergent, do not store the detergent package in humid places. Keep it in a closed container if possible. For ease-of-storing, we recommend you to use tablet detergents.*
- Impeller holes are clogged. > > > *Lower and upper impeller holes might be clogged with food remnants such as lemon pips. Clean the impellers regularly as illustrated in section "Cleaning and Care".*

Decorations and ornaments on kitchen utensils are being erased.

ⓘ Decorated glasses and decorated luster porcelains are not suitable for washing in the dishwasher. Manufacturers of glassware and porcelain tableware items do not recommend washing such kitchen utensils in the dishwashers either.

Dishes are scratched.

ⓘ Kitchen utensils that contains or are made of aluminum should not be washed in dishwasher.

- Salt leakage exists. > > > *Pay attention not to spill salt around the salt filling hole while adding salt. Spilled salt can cause scratches. Make sure that the salt reservoir lid is tightly closed after finishing the filling process. Run the prewash programme to remove the salt that spilled inside the machine. Since the salt granules that will remain under the lid will dissolve during prewash, causing the lid loosen, check the lid once again at the end of the programme.*
- Water hardness setting is low or salt level is insufficient > > > *Measure the hardness of the supply water appropriately and check the water hardness setting.*
- Dishes are not placed orderly in the machine. > > > *When placing the glasses and other glassware into the basket lean them not against other dishes but the edges or racks of the basket or the glass support wire.* Striking of the glasses to each other or to other dishes due to the impact of water during washing can cause breaks, or scratches on their surfaces.

A smear remains on glasses that resembles milk stain which can not be removed when wiped by hand. A bluish / rainbow appearance occurs when the glass is pointed to light.

- Excessive rinse aid is used. > > > *Lower rinse aid setting. Clean the spilled rinse aid when adding rinse aid.*
- Corrosion has occurred on glass due to soft water. > > > *Measure the hardness of the supply water appropriately and check the water hardness setting. If your supply water is soft (<5 dH), do not use salt. Choose programmes that wash in higher temperatures (e.g. 60-65°C). You can also use glass protective detergents that are commercially available.*

Foam forms in the machine.

- Dishes are washed with hand-wash detergent by hand but not rinsed before placing them into the machine. > > > *Hand-wash detergents do not contain antifoam. There is no need to hand-wash the dishes before placing them into the machine. Removing the coarse soil on the dishes under tap water, with a tissue paper or fork will be sufficient.*
- Rinse aid has spilled into the machine when adding rinse aid. > > > *Take care that rinse aid is not spilled in the machine when you are filling it. Clean any spilled rinse ait with the help of a tissue paper/towel.*
- Lid of the rinse aid reservoir is left open. > > > *Make sure that the lid of the rinse aid reservoir is closed after adding rinse aid.*

Kitchen utensils are broken.

- Dishes are not placed orderly in the machine. > > > *Load the dishes as described in the user manual.*
- Baskets are overloaded. > > > *Do not overload the baskets in excess of their capacity.*

Water remains in the dishwasher at the end of the programme.

- Filters are clogged. > > > *Check if the filter system is clean. Clean the filter system regularly as illustrated in section "Cleaning and Care".*
- Discharge hose is clogged/blocked. > > > *Check the discharge hose. If necessary, remove the discharge hose, clear the blockage and insert is as illustrated in the user manual.*

ⓘ If you cannot eliminate the problem although you follow the instructions in this section, consult your dealer or the Authorised Service Agent. Never try to repair a nonfunctional product yourself.