Refrigerator

User Manual

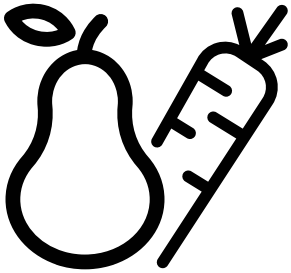

GNE60520X-GNE60520DX-GRNE60520DB-GNE360520DX
GRNE360520DB-GNE360520PX

EN

57 5233 0000/AU - EN

Please read these instructions first before using your appliance

Thank you for choosing a Beko appliance.

Please take some time to read this user manual before using your appliance, to ensure you know how to safely operate the controls and functions.

Carefully follow all unpacking and installation instructions to ensure the appliance is correctly connected and fitted prior to use.

Please write your product model and serial number on the last page of this user manual, and store in a safe location close to the appliance for easy future reference.

This user manual may also be applicable for several other models. Differences between models will be listed.

If you have any questions or concerns, please call our contact centre or find help and information online at www.beko.co.uk

Symbols and their descriptions

This instruction manual contains the following symbols:

Important information or useful usage tips.

Warning against dangerous conditions for life and property.

Warning against electric voltage.

INFORMATION

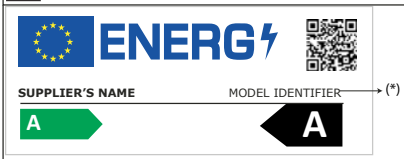

.The model information as stored in the product data base can be reached by entering following website and searching for your model identifier (*) found on energy label.

https://eprel.ec.europa.eu/

1. Safety and environment instructions 3

2 Refrigerator 6

3 Installation 7

3.1. Right place for installation 7
3.2. Attaching the plastic wedges ... 7
3.3. Adjusting the feet 8
3.4. Power connection 8
3.5. Water connection 8
3.6. Connecting water hose to the product 9
3.7. Connecting to water mains 9
3.8. For products using water carboy10
3.9 Water filter..... 11
3.9.1. Fixing external filter on the wall (Optional) 11
3.9.2. Internal filter 13

4 Preparation 15

4.1. What to do for energy saving...15
4.2. First use 15

5 Using the product 16

5.1. Indicator panel.....16
5.2. Indicator panel.....24
5.3. Zero degree compartment 28
5.4. Vegetable bin 28
5.5. Blue light/HarvestFresh.....28
5.6. Description and cleaning of odour filter.....29
5.7. Telescopic drawer 29
5.8. Ionizer 30
5.9. Ice box 30
5.10.Ice maker 30
5.11.Movable middle section 31
5.12.Ice container.....31
5.13.Freezing fresh food.....32
5.14.Recommendations for storing frozen foods.....32
5.15.Deep freezer details.....32
5.16.Placing the food 33
5.17.Door open alert.....33
5.18.Interior light 33

6. Maintenance and Cleaning34

6.1. Preventing Bad Odour.....34
6.2. Protecting Plastic Surfaces 34

7. Troubleshooting 35

1. Safety and environment instructions

This section provides the safety instructions necessary to prevent the risk of injury and material damage. Failure to observe these instructions will invalidate all types of product warranty.

Intended use

⚠	**WARNING:** Keep ventilation openings, in the appliance enclosure or in the built-instructure, clear of obstruction.
⚠	**WARNING:** Do not use mechanical devices or other means to accelerate the defrostingprocess, other than those recommended by the manufacturer.
⚠	**WARNING:** Do not damage the refrigerant circuit.
⚠	**WARNING:** Do not use electrical appliances inside the food storage compartments of the appliance, unless they are of the type recommended by the manufacturer.

1.1. General safety

- This appliance can be used by children aged from 8 years and above and persons with reduced physical,sensory or mental capabilities or lack of experience and knowledge if they have been given supervision or instruction concerning use of the appliance in a safe way and understand the hazards involved. Children shall not play with the appliance.
- In case of malfunction, unplug the device.
- After unplugging, wait at least 5 minutes before plugging in again.
- Unplug the product when not in use.
- Do not touch the plug with wet hands! Do not pull the cable to plug off, always hold the plug.
- Do not plug in the refrigerator if the socket is loose.
- Unplug the product during installation, maintenance, cleaning and repair.
- If the product will not be used for a while, unplug the product and remove any food inside.
- Do not use the product when the compartment with circuit cards located on the upper back part of the product (electrical card box cover) (1) is open.

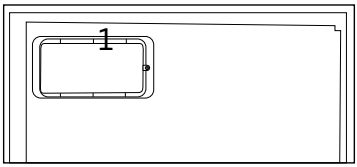

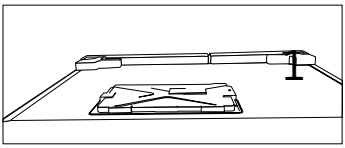

- Do not use steam or steamed cleaning materials for cleaning the refrigerator and melting the ice inside. Steam may contact the electrified areas and cause short circuit or electric shock!
- Do not wash the product by spraying or pouring water on it! Danger of electric shock!
- In case of malfunction, do not use the product, as it may cause electric shock. Contact the authorised service as soon as possible.
- Plug the product into an earthed socket. Earthing must be done by a qualified electrician.
- If the product has LED type lighting, contact the authorised service for replacing or in case of any problem.
- Do not touch frozen food with wet hands! It may adhere to your hands!
- Do not place liquids in bottles and cans into the freezer compartment. They may burst.
- Place liquids in upright position after tightly closing the lid.
- Do not spray flammable substances near the product, as it may burn or explode.
- Do not keep flammable materials and products with flammable gas (sprays, etc.) in the refrigerator.
- Do not place containers holding liquids on top of the product. Splashing water on an electrified part may cause electric shock and risk of fire.
- Exposing the product to rain, snow, sunlight and wind will cause electrical danger. When relocating the product, do not pull by holding the door handle. The handle may come off.
- Take care to avoid trapping any part of your hands or body in any of the moving parts inside the product.
- Do not step or lean on the door, drawers and similar parts of the refrigerator. This will cause the product to fall down and cause damage to the parts.
- Take care not to trap the power cable.

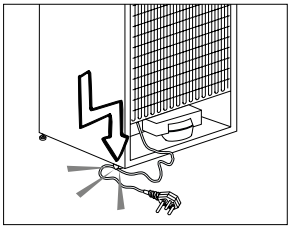

1.2. HC warning

If the product comprises a cooling system using R600a gas, take care to avoid damaging the cooling system and its pipe while using and moving the product. This gas is flammable. If the cooling system is damaged, keep the product away from sources of fire and ventilate the room immediately.

ℹ	The label on the inner left side indicates the type of gas used in the product.

1.3. For models with water dispenser

- Pressure for cold water inlet shall be maximum 90 psi (6.2 bar). If your water pressure exceeds 80 psi (5.5 bar), use a pressure limiting valve in your mains system. If you do not know how to check your water pressure, ask for the help of a professional plumber.
- If there is a risk of water hammer effect in your installation. Consult a plumber.
- Do not install on the hot water inlet. Take precautions against of the risk of freezing of the hoses. Water temperature operating interval shall be 33°F (0.6°C) minimum and 100°F (38°C) maximum.
- Use drinking water only.

1.4. Intended use

- This product is designed for home use. It is not intended for commercial use.
- The product should be used to store food and beverages only.
- Do not keep sensitive products requiring controlled temperatures (vaccines, heat sensitive medication, medical supplies, etc.) in the refrigerator.
- The manufacturer assumes no responsibility for any damage due to misuse or mishandling.

1.5. Child safety

- Keep packaging materials out of children's reach.
- Do not allow the children to play with the product.
- If the product's door comprises a lock, break off the lock when eventually disposing of the product.

1.6. Compliance with WEEE Directive and Disposing of the Waste Product

This product complies with EU WEEE Directive (2012/19/EU). This product bears a classification symbol for waste electrical and electronic equipment (WEEE).

This product has been manufactured with high quality parts and materials which can be reused and are suitable for recycling. Do not dispose of the waste product with normal domestic and other wastes at the end of its service life. Take it to the collection center for the recycling of electrical and electronic equipment. Please consult your local authorities to learn about these collection centers.

1.7. Compliance with RoHS Directive

- This product complies with EU WEEE Directive (2011/65/EU). It does not contain harmful and prohibited materials specified in the Directive.

1.8. Packageinformation

- Packaging materials of the product are manufactured from recyclable materials in accordance with our National Environment Regulations. Do not dispose of the packaging materials together with the domestic or other wastes. Take them to the packaging material collection points designated by the local authorities.

2 Refrigerator

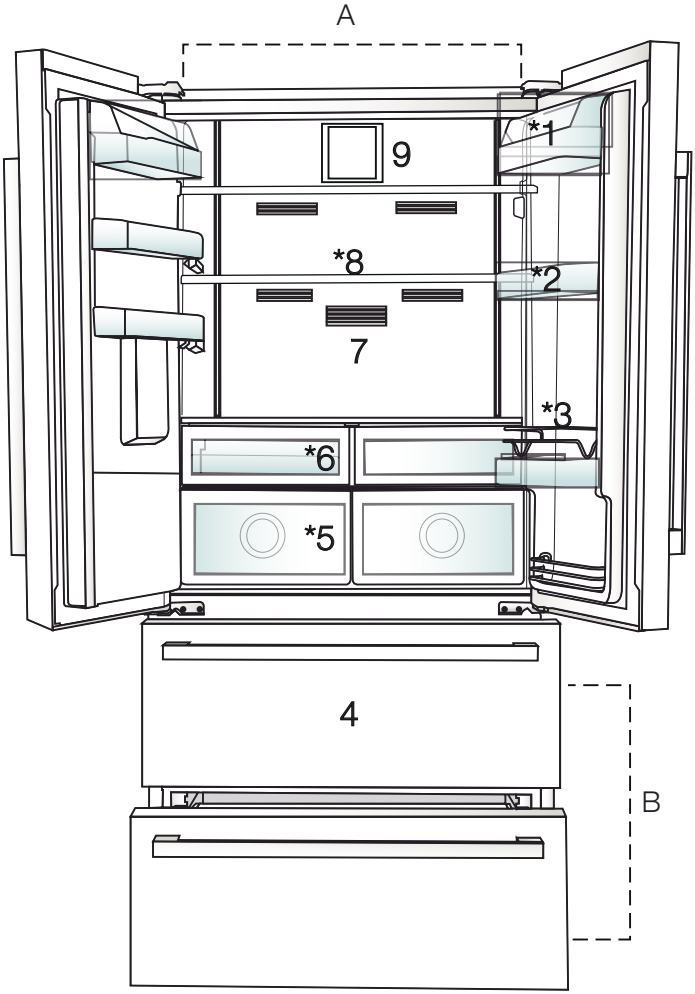

A- Cooler compartment
B- Freezer compartment
1. Butter-cheese shelf
2. Door shelves
3. Shelter wire
4. Frozen food storing compartments
5. Vegetable bins
6. Breakfast compartment
7. Odour filter
8. Adjustable glass shelves
9. Fan

*Optional: Figures in this user guide are schematic and may not exactly match your product. If your product does not comprise the relevant parts, the information pertains to other models.

3 Installation

3.1. Right place for installation

To ready the product for installation, see the information in the user guide and make sure the electric and water utilities are as required. If not, call an electrician and plumber to arrange the utilities as necessary.

	WARNING: The manufacturer assumes no responsibility for any damage caused by the work carried out by Unauthorised persons.
	WARNING: The product's power cable must be unplugged during installation. Failure to do so may result in death or serious injuries!
	WARNING: If the door span is too narrow for the product to pass, remove the door and turn the product sideways.

- Place the product on a flat surface to avoid vibration.
- Place the product at least 30 cm away from the heater, stove and similar sources of heat and at least 5 cm away from electric ovens.
- Do not expose the product to direct sunlight or keep in damp environments.
- The product requires adequate air circulation to function efficiently. If the product will be placed in an alcove, remember to leave at least 5 cm distance between the product and the ceiling and the walls.
- Do not install the product in environments with temperatures below -5°C.

3.2. Attaching the plastic wedges

Use the plastic wedges provided with the product to provide sufficient space for air circulation between the product and the wall.

1. To attach the wedges, remove the screws on the product and use the screws provided with the wedges.

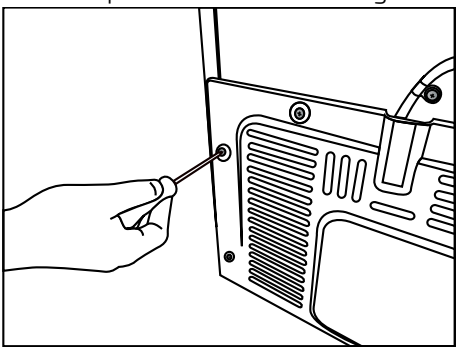

2. Attach 2 plastic wedges on the ventilation cover as shown in the figure.

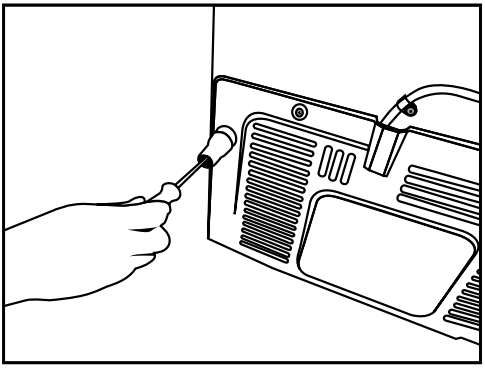

3.3.Adjusting the feet

If the product is not in balanced position, adjust the front adjustable feet by rotating right or left.

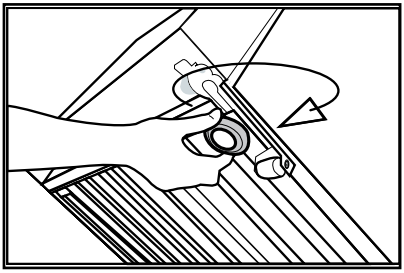

3.4. Power connection

	WARNING: Do not use extension or multi sockets in power connection.
	WARNING: Damaged power cable must be replaced by authorised Service.
	When placing two coolers in adjacent position, leave at least 4 cm distance between the two units.

- Our firm will not assume responsibility for any damages due to usage without earthing and power connection in compliance with national regulations.
- The power cable plug must be easily accessible after installation.
- Do not use multi-group plug or extension cable between the wall socket and the refrigerator.

3.5.Water connection

(Optional)

	WARNING: Unplug the product and the water pump (if available) during connection.

The product can be connected to a carboy or directly to the water mains, depending on the model. To establish the connection, the water hose must first be connected to the product. Check to see the following parts are supplied with your product's model:

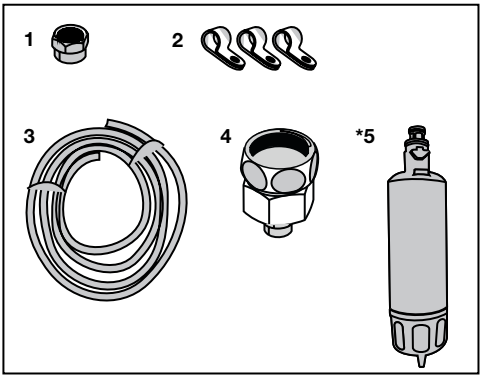

1. Connector (1 piece): Used to attach the water hose to the rear of the product.
2. Hose clip (3 pieces): Used to fix the water hose on the wall.

3. Water hose (1 piece, 5 meter diameter 1/4 inches): Used for the water connection.
4. Tap adapter (1 piece): Comprises a porous filter, used for connection to the cold water mains.
5. Water filter (1 piece *Optional): Used to connect the mains water to the product. Water filter is not required if carboy connection is available.

3.6. Connecting water hose to the product

To connect the water hose to the product, follow the instructions below.

1. Remove the connector on the hose nozzle adaptor in the back of the product and run the hose through the connector.

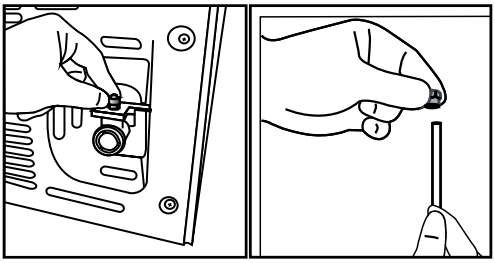

2. Push the water hose down tightly and connect to the hose nozzle adaptor.

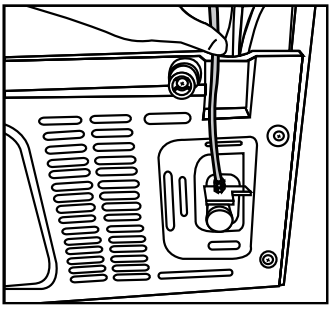

3. Tighten the connector manually to fix on the hose nozzle adaptor. You may also tighten the connector using a pipe wrench or pliers.

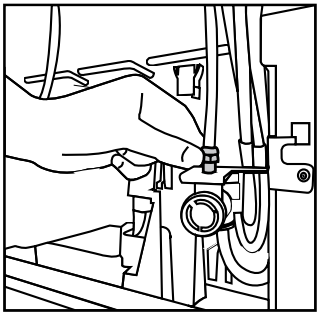

3.7.Connecting to water mains

(Optional)

To use the product by connecting to the cold water mains, a standard 1/2" valve connector must be installed to the cold water mains in your home. If the connector is not available or if you are unsure, consult a qualified plumber.

1. Detach the connector (1) from the tap adaptor (2).

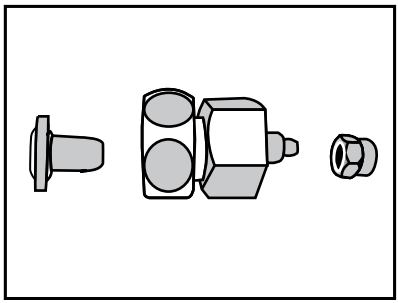

2. Connect the tap adaptor to the water mains valve.

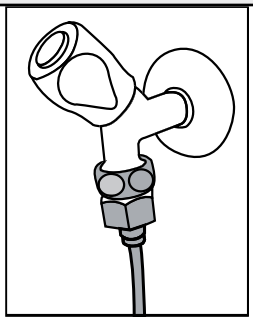

3. Attach the connector around the water hose.

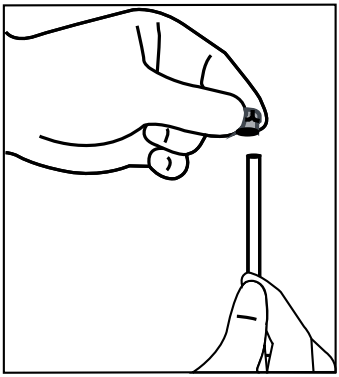

4. Attach the connector into the tap adaptor and tighten by hand / tool.

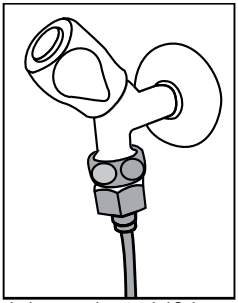

5. To avoid damaging, shifting or accidentally disconnecting the hose, use the clips provided to fix the water hose appropriately.

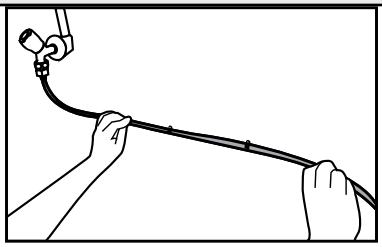

WARNING: After turning the tap on, make sure there is no water leak on either end of the water hose. In case of leakage, turn the valve off and tighten all connections using a pipe wrench or pliers.

3.8. For products using water carboy

(Optional)

To use a carboy for the product's water connection, a proprietary brand of water pump is recommended.

1. Connect one end of the water hose provided with the pump to the product (see 3. 6) and follow the instructions below.

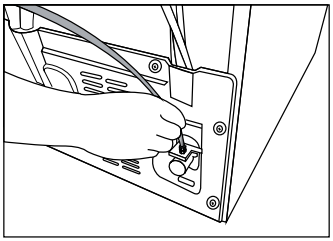

2. Connect the other end of the water hose to the water pump by pushing the hose into the pump's hose inlet.

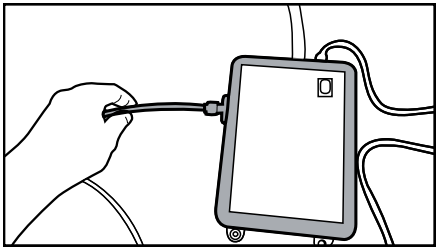

3. Place and fasten the pump hose inside the carboy.

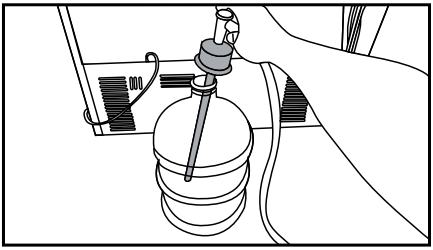

4. Once the connection is established, plug in and start the water pump.

	Please wait 2-3 minutes after starting the pump to achieve the desired efficiency.
	See also the pump's user guide for water connection.
	When using carboy, water filter is not required.

3.9 Water filter

(Optional)

The product may have internal or external filter, depending on the model. To attach the water filter, follow the instructions below.

3.9.1. Fixing external filter on the wall (Optional)

	WARNING: Do not fix the filter on the product.

Check to see the following parts are supplied with your product's model:

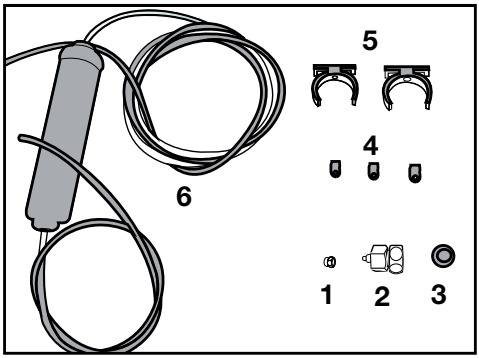

1. Connector (1 piece): Used to attach the water hose to the rear of the product.
2. Tap adapter (1 piece): Used for connection to the cold water mains.
3. Porous filter (1 piece)
4. Hose clip (3 pieces): Used to fix the water hose on the wall.
5. Filter connecting apparatus (2 pieces): Used to fix the filter on the wall.
6. Water filter (1 piece): Used to connect the mains water to the product. Water filter is not required if carboy connection is available.

1. Connect the tap adaptor to the water mains valve.

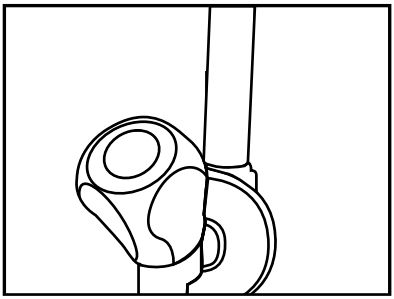

2. Determine the location to fix the external filter. Fix the filter's connecting apparatus (5) on the wall.

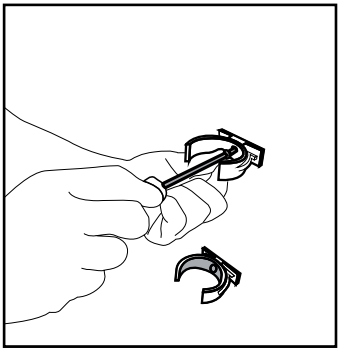

3. Attach the filter in upright position on the filter connecting apparatus, as indicated on the label. (6).

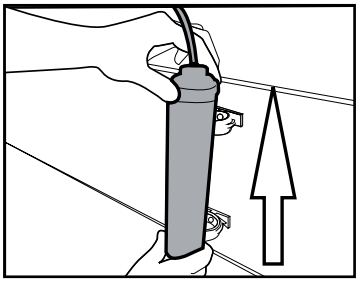

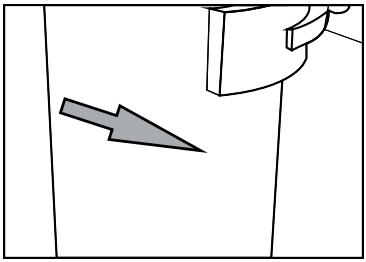

4. Attach the water hose extending from the top of the filter to the product's water connection adaptor (see. 3 6).

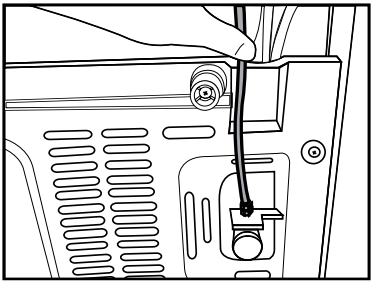

After the connection is established, it should look like the figure below.

Water line:

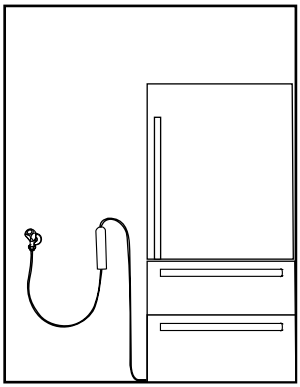

Carboy line:

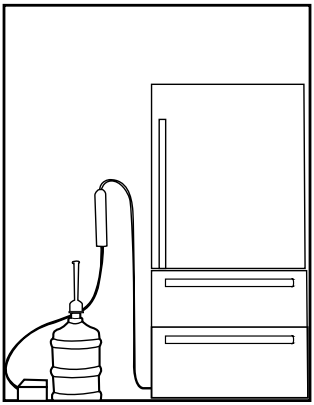

3.9.2. Internal filter

The internal filter provided with the product is not installed upon delivery; please follow the instructions below to install the filter.

1. "**Ice Off "** indicator must be active while installing the filter. Switch the ON-OFF indicator using the "**Ice"** button on the screen.

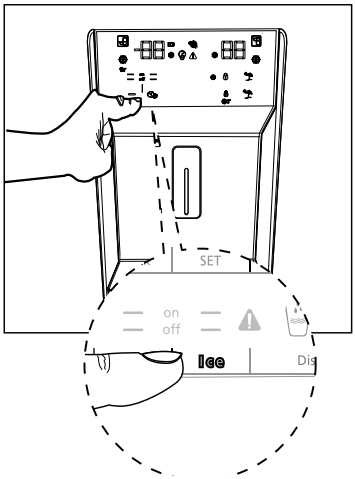

2. Remove the water filter by-pass cover by pulling.

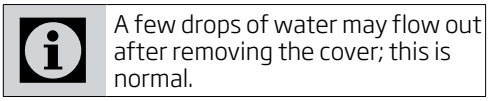
A few drops of water may flow out after removing the cover; this is normal.

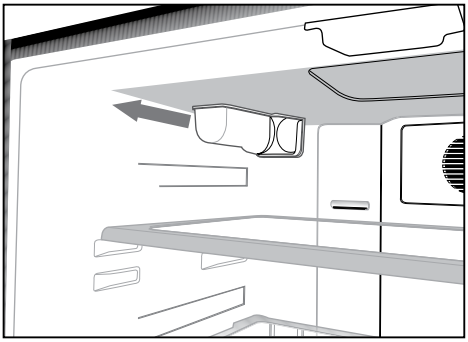

3. Place the water filter cover into the mechanism and push to lock in place.

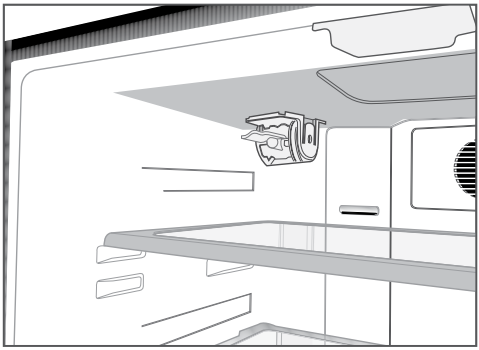

4. Push the **“Ice”** button on the screen again to cancel the “**Ice Off ”** mode.

	The water filter will clear certain foreign particles in the water. It will not clear the microorganisms in the water.
	The filter replacement period of your product is 6 months.

4 Preparation

4.1. What to do for energy saving

Connecting the product to electronic energy-saving systems is harmful, as it may damage the product.

- For a freestanding appliance; 'this refrigerating appliance is not intended to be used as a built-in appliance' .
- Do not keep the refrigerator doors open for long periods.
- Do not place hot food or beverages into the refrigerator.
- Do not overfill the refrigerator; blocking the internal air flow will reduce cooling capacity.
- To be able store maximum food in the freezer compartment of your refrigerator, the upper drawers have to be removed and placed on top of wire rack. The net volume and energy consumption values specified in the energy label of the refrigerator was tested after removing the freezer compartment's upper shelf and the ice container which can easily be removed manually. Using the lower drawer while loading is highly recommended.
- Since hot and humid air will not directly penetrate into your product when the doors are not opened, your product will optimize itself in conditions sufficient to protect your food. Functions and components such as compressor, fan, heater, defrost, lighting, display and so on will operate according to the needs to consume minimum energy under these circumstances.
- Depending on the product's features; defrosting frozen foods in the cooler compartment will ensure energy saving and preserve food quality.
- Make sure the foods are not in contact with the cooler compartment temperature sensor described below.
- Food must be stored in drawers inside the cooler compartment in order to provide energy saving and preserve the food in a better ambient.
- Prevent direct contact between the temperature sensor in the freezer compartment and the food packages. Energy consumption may increase in case of a contact with the sensor.

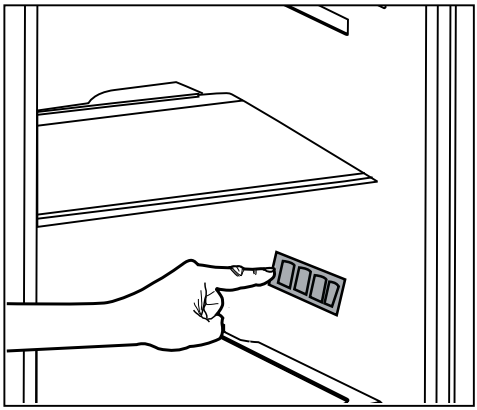

4.2. First use

Before using your refrigerator, make sure the necessary preparations are made in line with the instructions in "Safety and environment instructions" and "Installation" sections.

- Keep the product running with no food inside for 6 hours and do not open the door, unless absolutely necessary.

A sound will be heard when the compressor is engaged. It is normal to hear sound even when the compressor is inactive, due to the compressed liquids and gasses in the cooling system.

It is normal for the front edges of the refrigerator to be warm. These areas are designed to warm up in order to prevent condensation.

5 Using the product

5.1. Indicator panel

Indicator panels may vary depending on the model of your product.
Audio and visual functions of the indicator panel will assist in using the refrigerator.

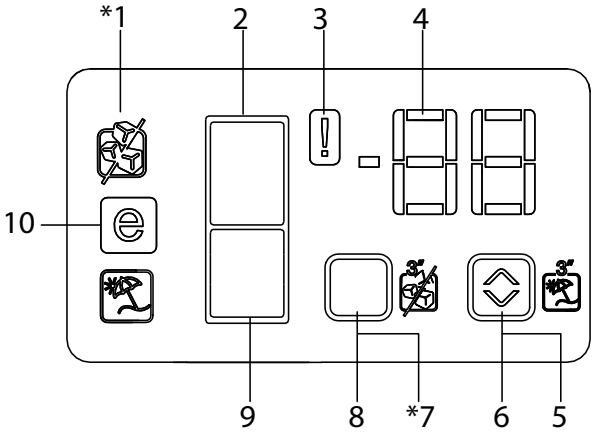

1. Automatic Ice Machine Off/On indicator
2. Fridge Compartment Indicator
3. Error Status Indicator
4. Temperature Indicator
5. Vacation Button
6. Temperature Setting Button
7. Ice Cancel Button
8. Compartment Selection Button
9. Freezer Compartment Indicator
10. Economy Mode Indicator

*Optional: Figures in this user guide are schematic and may not exactly match your product. If your product does not comprise the relevant parts, the information pertains to other models.

1. Automatic Ice Machine Off/On indicator

This symbol appears on the display when Ice Off function is activated.

2. Fridge Compartment Indicator

Fridge compartment light illuminates when adjusting the fridge compartment temperature.

3. Error Status Indicator

If your refrigerator does not cool adequately or if there is a sensor failure, this indicator will be activated. When this indicator is active, Freezer Compartment Temperature indicator will display "e" and Fridge Compartment Temperature Indicator will display numbers such as "1,2,3...". These numbers on the indicator provides information about the error to the service personnel.

4. Temperature Indicator

Indicates the temperatures of fridge, freezer compartment.

5. Vacation Button

Press and hold this button for 3 sec. to activate the Vacation function. Press this button again to deactivate the selected function.

6. Temperature Setting Button

Changes the temperature of the relevant compartment between -24°C ..... -18°C and 8°C ...1°C .

7. Ice Cancel Button

Refrigerator stops ice production when you press selection button for 3 seconds.

8. Refrigerator Compartment

Selection Button Press Refrigerator Compartment Selection Button to switch between fridge and freezer compartments.

9. Freezer Compartment Indicator

Freezer compartment light illuminates when adjusting the freezer compartment temperature.

10. Economy Mode Indicator

This indicates that the refrigerator is running in energy-efficient mode. This indicator will be active if the Freezer Compartment temperature is set to -18°C .

Indicator panel

This touch-control indicator panel allows you to set the temperature without opening the door of your refrigerator. Just touch the relevant button with your finger to set the temperature.

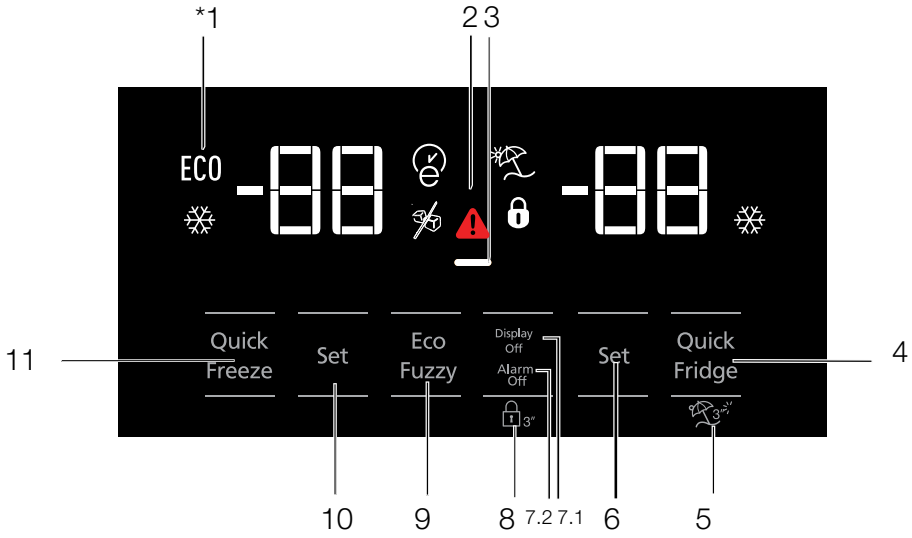

1- Economic use
2- High temperature / fault alert
3- Energy saving function (display off)
4- Rapid cooling
5- Vacation function
6- Cooler compartment temperature setting
7- Energy saving (display off) / Alarm off warning
8- Keypad lock
9- Eco-fuzzy
10- Freezer compartment temperature setting
11- Rapid freezing

*Optional: Figures in this user guide are schematic and may not exactly match your product. If your product does not comprise the relevant parts, the information pertains to other models.

1. Economic use

This sign will light up when the freezer compartment is set to -18°C, the most economical setting. (ECO) Economic use indicator will turn off when rapid cooling or rapid freezing function is selected.

2. High temperature / fault alert

This indicator (⚠) will light up in case of temperature faults or fault alerts. This indicator illuminates during power failure, high temperature failures and error warnings. During sustained power failures, the highest temperature that the freezer compartment reaches will flash on the digital display. After checking the food located in the freezer compartment press the alarm off button to clear the warning.

3. Energy saving function (display off)

If the product doors are kept closed for a long time energy saving function is automatically activated and energy saving symbol is illuminated. When energy saving function is activated, all symbols on the display other than energy saving symbol will turn off. When the Energy Saving function is activated, if any button is pressed or the door is opened, energy saving function will be cancelled and the symbols on display will return to normal.

Energy saving function is activated during delivery from factory and cannot be cancelled.

4. Rapid cooling

When the rapid cooling function is turned on, the rapid cool indicator will light up (❄) and the cooler compartment temperature indicator will display the value 1. Push the Rapid cool button again to cancel this function. The Rapid cool indicator will turn off and return to normal setting. The rapid cooling function will be automatically cancelled after 1 hour, unless cancelled by the user. Too cool a large amount of fresh food, press the rapid cool button before placing the food in the cooler compartment.

5. Vacation function

To activate the Vacation function, press the button for (🌴) 3 seconds; this will activate the vacation mode indicator (⛱). When the Vacation function is active, the cooler compartment temperature indicator displays the inscription "- -" and no cooling process will be active in the cooling compartment. This function is not suitable to keep food in the cooler compartment. Other compartments will remain cooled with the respective temperature set for each compartment.

Push the **vacation** function button again to cancel this function

6. Cooler compartment temperature setting

After pressing the button, the cooler compartment temperature can be set to 8,7,6,5,4,3,2 and 1 respectively. (🌡)

7.1. Energy saving (display off)

Pressing this button (▬) will light up the energy saving sign (▬) and the Energy-saving function will activate. Activating the energy-saving function will turn off all other signs on the display. When the energy-saving function is active, pressing any button or opening the door will deactivate the energy-saving function and the display signals will return to normal. Pressing this button (▬) again will turn off the energy-saving sign and deactivate the energy-saving function.

7.2.Alarm off warning:

In case of power failure/high temperature alarm, after checking the food located in the freezer compartment press the alarm off button to clear the warning.

8. Keypad lock

Press the keypad lock button ( ) simultaneously for 3 seconds. The keypad lock sign

( ) will light up and the keypad lock will be activated. The buttons will be inactive when the Keypad lock is activated. Press the Keypad lock button again simultaneously for 3 seconds. The keypad lock sign will turn off and the keypad lock mode will be disengaged.

Press the **keypad lock** button ( ) to prevent changing the refrigerator's temperature settings.

9. Eco-fuzzy

To activate the eco-fuzzy function, press and hold the eco-fuzzy button for 1 second. When this function is active, the freezer will switch to the economic mode after at least 6 hours and the economic use indicator will light up. To deactivate the ( ) eco-fuzzy function, press and hold the eco-fuzzy function button for 3 seconds.

The indicator will light up after 6 hours when the eco-fuzzy function is active.

10. Freezer compartment temperature setting

The temperature in the freezer compartment is adjustable. Pressing the button will enable the freezer compartment temperature to be set at -18,-19, -20, -21, -22, -23 and -24. ( )

11. Rapid freezing

For rapid freezing, press the button; this will activate the rapid freezing indicator ( ).

When the rapid freezing function is turned on, the rapid freeze indicator will light up and the freezer compartment temperature indicator will display the value -27. Press the Rapid freeze button ( ) again to cancel this function. The Rapid freeze indicator will turn off and return to normal setting. The rapid freezing function will be automatically cancelled after 24 hours, unless cancelled by the user. To freeze a large amount of fresh food, press the rapid freeze button before placing the food in the freezer compartment.

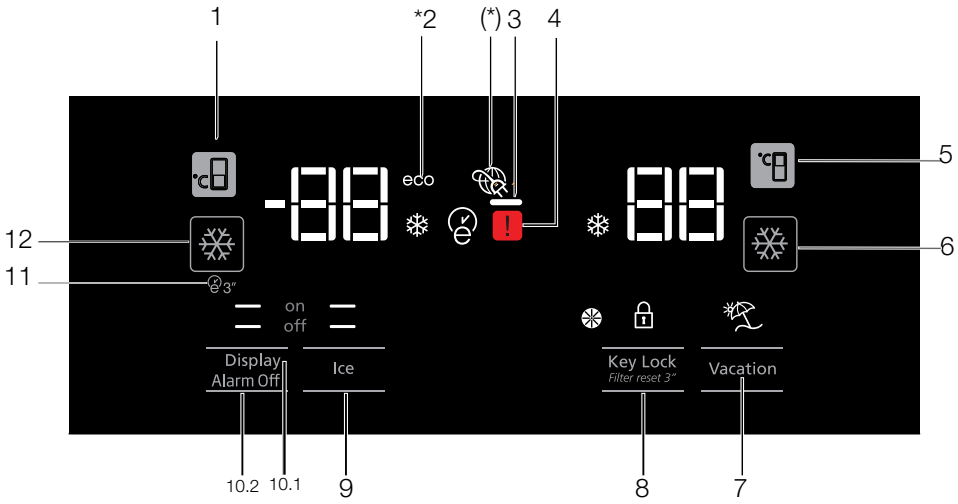

1. Freezer compartment temperature setting
2. Economy mode
3- Energy saving function (display off)
4. Error status
5. Cooler compartment temperature setting
6. Rapid cooling
7. Vacation function
8. Keypad lock / filter replacing alert cancellation
9. Ice making on/off
10. Display on/off /Alarm off
11. Autoeco
12. Rapid freezing

*Optional: Figures in this user guide are schematic and may not exactly match your product. If your product does not comprise the relevant parts, the information pertains to other models.

1. Freezer compartment temperature setting

Pressing the button ( ) will enable the freezer compartment temperature to be set at -18,-19,-20,-21 ,-22,-23,-24,-18...

2. Economy mode

Indicates the refrigerator is running on energy-saving mode. This indicator will be active when the freezer compartment temperature is set at -18 or the energy-saving cooling is engaged by **eco-extra** function. (ECO)

3. Energy saving function (display off)

If the product doors are kept closed for a long time energy saving function is automatically activated and energy saving symbol is illuminated. When energy saving function is activated, all symbols on the display other than energy saving symbol will turn off. When the Energy Saving function is activated, if any button is pressed or the door is opened, energy saving function will be cancelled and the symbols on display will return to normal.

Energy saving function is activated during delivery from factory and cannot be cancelled.

4. Error status

This sign will activate if the refrigerator is not cooling adequately or in case of sensor fault. ( )

When this indicator is activated, the freezer compartment temperature indicator will display "E" and the cooler compartment temperature indicator will display "1, 2, 3..." etc. numbers. The numbers on the indicator serve to inform the service personnel about the fault.

5. Cooler compartment temperature setting

After pressing the button ( ) , the cooler compartment temperature can be set to 8,7,6,5,4,3,2... respectively.

6. Rapid cooling

For rapid cooling, press the button; this will activate the rapid cooling indicator ( ).

Press this button again to deactivate this function.

Use this function when placing fresh foods into the cooler compartment or to rapidly cool the food items. When this function is activated, the refrigerator will be engaged for 1 hour.

7. Vacation function

When the Vacation function ( ) is active, the cooler compartment temperature indicator displays the inscription "- -" and no cooling process will be active in the cooling compartment. This function is not suitable to keep food in the cooler compartment. Other compartments will remain cooled with the respective temperature set for each compartment.

Press the **vacation function** button again to cancel this function. ( )

8. Keypad lock / Keypad lock / filter replacing alert cancellation

Press keypad lock button ( ) to activate the keypad lock. You may also use this function to prevent changing the refrigerator's temperature settings. The refrigerator's filter must be replaced every 6 months. If you follow the instructions in the section 5.2, the refrigerator will automatically calculate the remaining period and the filter replacing alert indicator ( ) will light up when filter expires.

Press and hold the button (3") for 3 seconds to turn off the filter alert light.

9. Ice making on/off

Press the button ( ) to cancel (off —) or activate (on —) ice-making.

10.1 Display on/off

Press the button to cancel (— off) or activate (— on) display on/off.

10.2 Alarm off warning

In case of power failure/high temperature alarm, after checking the food located in the freezer compartment press the alarm off button to clear the warning.

11. Autoeco

Press the auto eco button (3"), for 3 seconds to activate this function. If the door remains closed for a long time when this function is activated, the cooler section will switch to economic mode. Press the button again to deactivate this function.

The indicator will light up after 6 hours when the auto eco function is active. ( )

12. Rapid freezing

Press the button ( ) for rapid freezing. Press the button again to deactivate the function.

5.2.Indicator panel

Indicator panel allows you to set the temperature and control the other functions related to the product without opening the door of the product. Just press the inscriptions on relevant buttons for function settings.

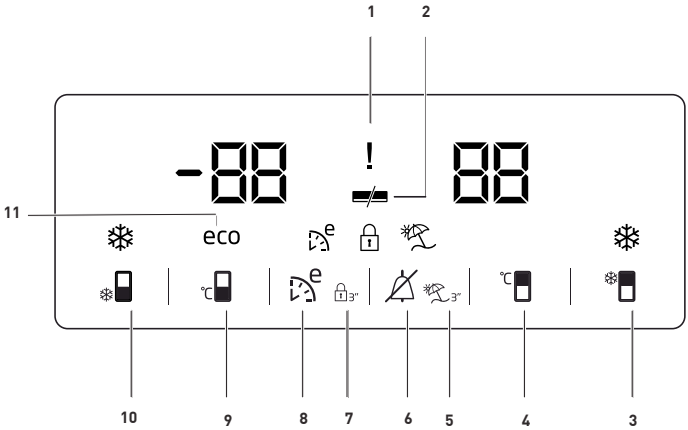

1. Power failure/High temperature / error warning indicator

This indicator (!) illuminates during power failure, high temperature failures and error warnings. During sustained power failures, the highest temperature that the freezer compartment reaches will flash on the digital display. After checking the food located in the freezer compartment (🔕) press the alarm off button to clear the warning.

2. Energy saving function (display off)

If the product doors are kept closed for a long time energy saving function is automatically activated and energy saving symbol is illuminated. (▬/▬)

When energy saving function is activated, all symbols on the display other than energy saving symbol will turn off. When the Energy Saving function is activated, if any button is pressed or the door is opened, energy saving function will be canceled and the symbols on display will return to normal.

Energy saving function is activated during delivery from factory and cannot be canceled.

*Optional: Figures in this user guide are schematic and may not exactly match your product. If your product does not comprise the relevant parts, the information pertains to other models.

3.Quick fridge function

The button has two functions. To activate or deactivate the quick cool function press it briefly. Quick Cool indicator will turn off and the product will return to its normal settings. ( )

	Use quick cooling function when you want to quickly cool the food placed in the fridge compartment. If you want to cool large amounts of fresh food, activate this function before putting the food into the product.
	If you do not cancel it, quick cooling will cancel itself automatically after 1 hours or when the fridge compartment reaches to the required temperature.
	If you press the quick cooling button repeatedly with short intervals, the electronic circuit protection will be activated and the compressor will not start up immediately.
	This function is not recalled when power restores after a power failure.

4. Fridge compartment temperature setting button

Press this button to set the temperature of the fridge compartment to 8,7,6, 5,4,3, 2 ,1 ,8... respectively. Press this button to set the fridge compartment temperature to the desired value. ( )

5.Vacation Function

In order to activate vacation function, press the this button ( ) for 3 seconds, and the vacation mode indicator ( ) will be activated. When the vacation function is activated, "- -" is displayed on the fridge compartment temperature indicator and no active cooling is performed on the fridge compartment. It is not suitable to keep the food in the fridge compartment when this function is activated. Other compartments shall be continued to be cooled as per their set temperature.

To cancel this function press **Vacation function** button again.

6. Alarm off warning

In case of power failure/high temperature alarm, after checking the food located in the freezer compartment press the alarm off button ( ) to clear the warning.

7. Key lock

Press key lock button ( ) simultaneously for 3 seconds. Key lock symbol

( ) will light up and key lock mode will be activated. Buttons will not function if the Key lock mode is active. Press key lock button simultaneously for 3 seconds again. Key lock symbol will turn off and the key lock mode will be exited.

Press the **key lock** button if you want to prevent changing of the temperature setting of the refrigerator ( ).

8. Eco fuzzy

Press and hold eco fuzzy button for 1 seconds to activate eco fuzzy function. Refrigerator will start operating in the most economic mode at least 6 hours later and the economic usage indicator will turn on when the function is active

( ). Press and hold eco fuzzy function button for 3 seconds to deactivate eco fuzzy function.

This indicator is illuminated after 6 hours when eco fuzzy is activated.

9. Freezer compartment temperature setting button

Press this button to set the temperature of the freezer compartment to -18,-19,-20,-21, -22, -23,-24, -18... respectively. Press this button to set the freezer compartment temperature to the desired value.( )

10. Quick freeze function button/ icematic on-off button

Press this button to activate or deactivate the quick freezing function. When you activate the function, the freezer compartment will be cooled to a temperature lower than the set value. ( )To turn on and off the icematic press and hold it for 3 seconds.

	Use the quick freeze function when you want to quickly freeze the food placed in fridge compartment. If you want to freeze large amounts of fresh food, activate this function before putting the food into the product.
	If you do not cancel it, Quick Freeze will cancel itself automatically after 24 hours or when the fridge compartment reaches to the required temperature.
	This function is not recalled when power restores after a power failure.

11. Economic usage indicator

Indicates that the product is running in energy-efficient mode. (eco)This indicator will be active if the Freezer Compartment temperature is set to -18 or the energy efficient cooling is being performed due to Eco-Extra function.

	Economic usage indicator is turned off when quick cooling or quick freeze functions are selected.

Any time after energising, by pressing the Fridge Set and Quick Fridge buttons for 3 seconds, you can make Celsius>Fahrenheit, Fahrenheit>Celsius conversions.

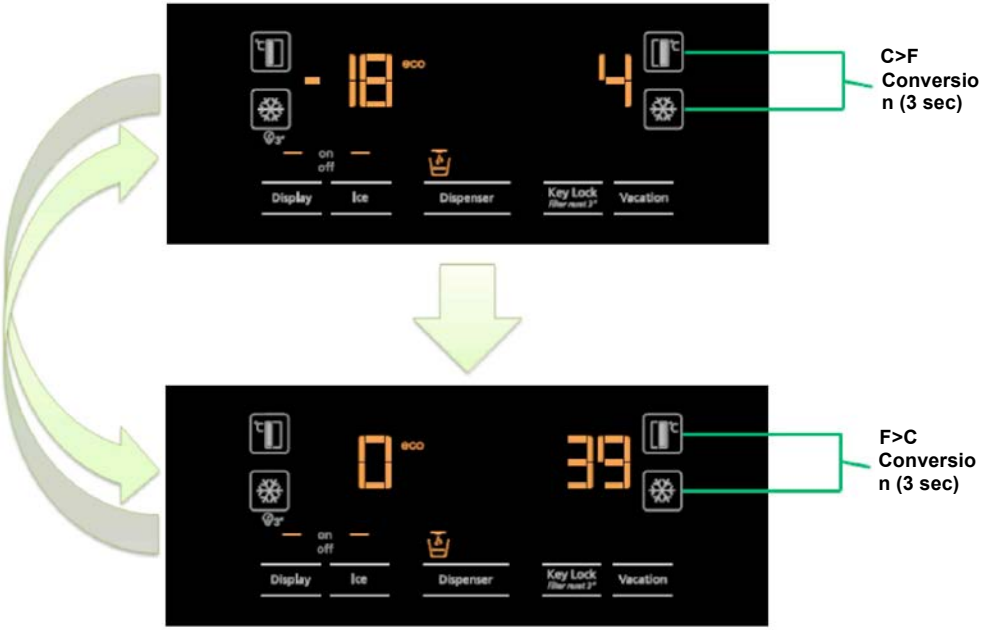

5.3.Zero degree compartment

(Optional)

Use this compartment to keep delicatessen at lower temperatures or meat products for immediate consumption. Do not place fruits and vegetables in this compartment.
You can expand the product's internal volume by removing any of the zero degree compartments.
To remove the compartment, simply pull forth, lift up and pull out.

5.4. Vegetable bin

The refrigerator's vegetable bin is designed to keep vegetables fresh by preserving humidity. For this purpose, the overall cold air circulation is intensified in the vegetable bin. Keep fruits and vegetables in this compartment. Keep the greenleaved vegetables and fruits separately to prolong their life.

5.5.Blue light/ HarvestFresh

***May not be available in all models**

For the blue light,

Fruits and vegetables stored in the crispers that are illuminated with a blue light continue their photosynthesis by means of the wavelength effect of blue light and thus preserve their vitamin content.

ForHarvestFresh,

Fruits and vegetables stored in crispers illuminated with the HarvestFresh technology preserve their vitamins for a longer time thanks to the blue, green, red lights and dark cycles, which simulate a day cycle.
If you open the door of the refrigerator during the dark period of the HarvestFresh technology, the refrigerator will automatically detect this and enable the blue-green or red light to illuminate the crisper for your convenience. After you have closed the door of the refrigerator, the dark period will continue, representing the night time in a day cycle.

5.6. Description and cleaning of odour filter

(Optional)

Odour filter prevents unpleasant odour build-up in your product.

1. Pull the cover into which the odour filter is installed downwards from the front section and remove as illustrated.
2. Leave the filter under sunlight for one day. Filter will be cleaned during this time.
3. Install the filter back to its place.

Odour filter must be cleaned once in a year.

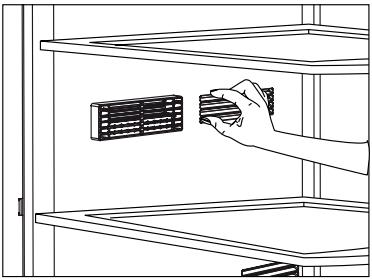

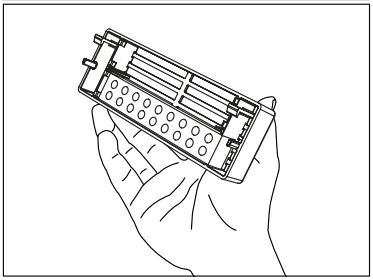

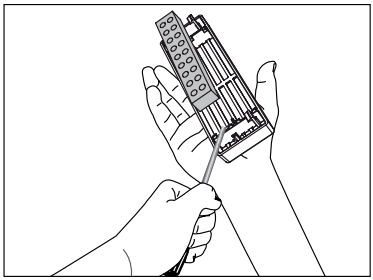

5.7. Telescopic drawer

Pay attention not to squeeze any parts of your body such as hands, feet and etc. between the movable parts while the drawer is in use in order to avoid any injury.

You can remove the partition in the drawer as illustrated when you want to clean it.

You can remove the drawers only for cleaning.It is not possible to group the drawers in their places after loading them with food when they are removed.

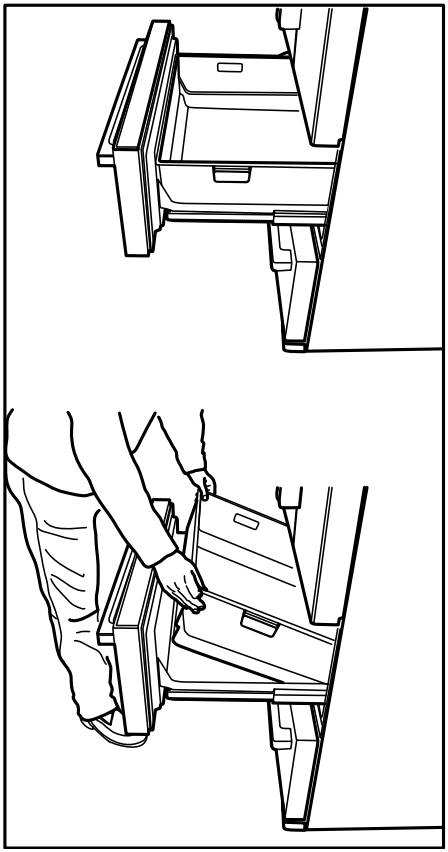

5.8. Ionizer

(Optional)

The ionizer system in the cooler compartment's air duct serves to ionize the air. The negative ion emissions will eliminate bacteria and other molecules causing odour in the air.

5.9. Ice box

(Optional)

Please read the warnings carefully on the ice container. The ice container is used for ice collection poured ice machine. Do not put water in it to make ice as it may break. The ice container is not used for storing foods.

Warning: Do not change the location of the ice container.

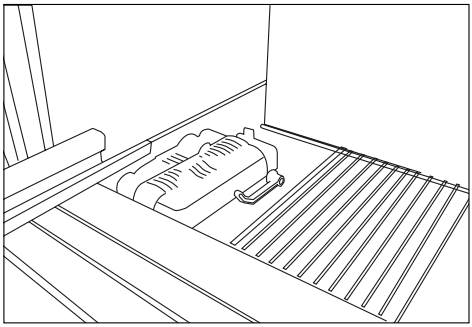

5.10. Ice maker

(Optional)

The ice machine is nonremovable. There must be ice container at the bottom of the ice machine.

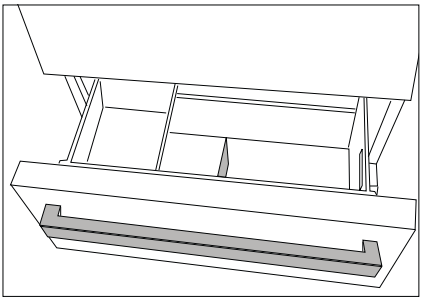

5.11. Movable middle section

Movable middle section is intended to prevent the cold air inside your refrigerator from escaping outside.

Sealing is provided when the gaskets on the door presses on the surface of the movable middle section while the cooler compartment doors are closed.

Another reason that your refrigerator is equipped with a movable middle section is that it increases the net volume of the cooler compartment.Standard middle sections occupy some non-usable volume in the refrigerator.

Movable middle section is closed when the left door of the cooler compartment is closed.

It must not be opened manually. It moves under the guidance of the plastic part on the body while the door is closed.

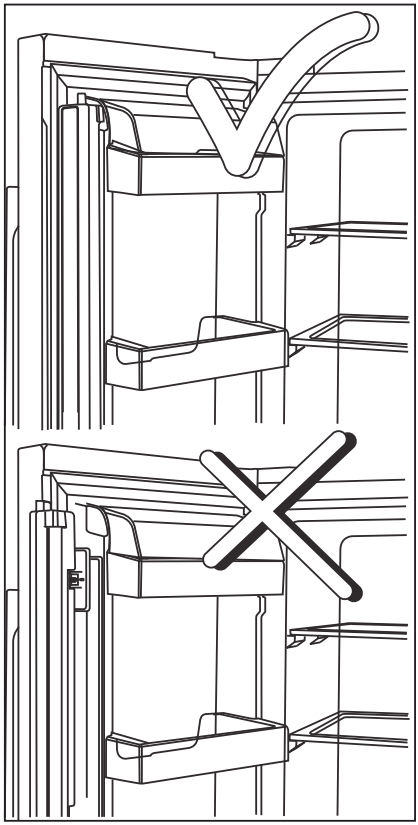

5.12. Ice container

(Optional)

Ice container allows you to obtain ice from the product easily.

Using the ice container

1. Remove the ice container from the freezer compartment.
2. Fill the ice container with water.
3. Place the ice container in the freezer compartment. About two hours later, the ice is ready.
4. Remove the ice container from the freezer compartment and bend it over the service plate. Ice cubes will easily fall down to the service plate.

5.13. Freezing fresh food

- To preserve food quality, the food items placed in the freezer compartment must be frozen as quickly as possible, use the rapid freezing for this.
- Freezing the food items when fresh will extend the storage time in the freezer compartment.
- Pack the food items in air-tight packs and seal tightly.
- Make sure the food items are packed before putting in the freezer. Use freezer holders, tinfoil and damp-proof paper, plastic bag or similar packaging materials instead of traditional packaging paper.
- Mark each food pack by writing the date on the package before freezing. This will allow you to determine the freshness of each pack every time the freezer is opened. Keep the earlier food items in the front to ensure they are used first.
- Frozen food items must be used immediately after defrosting and should not be frozen again.
- Do not Freeze large quantities of food at once. Maximum 10Kg per 24 hours

Freezer Compartment Setting	Cooler compartment Setting	Descriptions
-18°C	4°C	This is the default, recommended setting.
-20,-22 or -24°C	4°C	These settings are recommended for ambient temperatures exceeding 30°C.
Rapid Freeze	4°C	Use this to freeze food items in a short time. The product will reset to previous settings when the process is completed.
-18°C or colder	2°C	Use these settings if you believe the cooler compartment is not cold enough due to ambient temperature or frequently opening the door.

5.14. Recommendations for storing frozen foods

The compartment must be set to at least -18°C.

1. Place the food items in the freezer as quickly as possible to avoid defrosting.
2. Before freezing, check the "Expiry Date" on the package to make sure it is not expired.
3. Make sure the food's packaging is not damaged.

5.15. Deep freezer details

As per the IEC 62552 standards, the freezer must have the capacity to freeze 4.5 kg of food items at -18°C or lower temperatures in 24 hours for each 100 litres of freezer compartment volume.
Food items can only be preserved for extended periods at or below temperature of -18°C .
You can keep the foods fresh for months (in deep freezer at or below temperatures of 18°C).
The food items to be frozen must not contact the already-frozen food inside to avoid partial defrosting.

Boil the vegetables and filter the water to extend the frozen storage time.
Place the food in air-tight packages after filtering and place in the freezer.
Bananas, tomatoes, lettuce, celery, boiled eggs, potatoes and similar food items should not be frozen. When these foods are frozen, only their nutritional value and taste shall be affected negatively. They shall not be spoiled so that they would create a risk for human health.

5.16. Placing the food

Freezer compartment shelves	Various frozen foods including meat, fish, ice cream, vegetables etc.
Cooler compartment shelves	Food items inside pots, capped plate and capped cases, eggs (in capped case)
Cooler compartment door shelves	Small and packed food or beverages
Vegetable bin	Fruits and vegetables
Fresh food compartment	Delicatessen (breakfast food, meat products to be consumed in short notice)

5.17. Door open alert

(Optional)

An audible alert will be heard if the product's door remains open for 1 minute. The audible alert will stop when the door is closed or any button on the display (if available) is pressed.

5.18. Interior light

Interior light uses a LED type lamp. Contact the authorised service for any problems with this lamp.
Interior light used in this product is not intended for home lighting and not suitable for such purposes. Interior lights in cooler or freezer compartments are intended to help safe and convenient food placement into the refrigerator.
The lamp(s) used in this appliance is not suitable for household room illumination.
The intended purpose of this lamp is to assist the user to place foodstuffs in the refrigerator/freezer in a safe and comfortable way.

6. Maintenance and Cleaning

Cleaning the product regularly will prolong its service life.

WARNING: Disconnect the power before cleaning the refrigerator.

- Do not use sharp and abrasive tools, soap, house cleaning materials, detergents, gas, gasoline, varnish and similar substances for cleaning.
- For non-No Frost products, water drops and frosting up to a fingerbreadth occur on the rear wall of the Fridge compartment. Do not clean it; never apply oil or similar agents on it.
- Only use slightly damp microfiber cloths to clean the outer surface of the product. Sponges and other types of cleaning cloths may scratch the surface.
- Melt a teaspoonful of carbonate in the water. Moisten a piece of cloth in the water and wring out. Wipe the device with this cloth and dry off thoroughly.
- Take care to keep water away from the lamp's cover and other electrical parts.
- Clean the door using a wet cloth. Remove all items inside to detach the door and chassis shelves. Lift the door shelves up to detach. Clean and dry the shelves, then attach back in place by sliding from above.
- Do not use chloric water or cleaning products on the exterior surface and chrome-coated parts of the product. Chlorine will cause rust on such metallic surfaces.
- Do not use sharp, abrasive tools, soap, household cleaning agents, detergents, kerosene, fuel oil, varnish etc. to prevent removal and deformation of the prints on the plastic part. Use lukewarm water and a soft cloth for cleaning and then wipe it dry.

6.1. Preventing Bad Odour

The product is manufactured free of any odorous materials. However, keeping the food in inappropriate sections and improper cleaning of internal surfaces may lead to malodour.
To avoid this, clean the inside with carbonated water every 15 days.

- Keep the foods in sealed holders. Microorganisms may spread out of unsealed food items and cause malodour.
- Do not keep expired and spoilt foods in the refrigerator.

6.2. Protecting Plastic Surfaces

Oil spilled on plastic surfaces may damage the surface and must be cleaned immediately with warm water.

7 Troubleshooting

Check this list before contacting the service. Doing so will save you time and money. This list includes frequent complaints that are not related to faulty workmanship or materials. Certain features mentioned herein may not apply to your product.

The refrigerator is not working.

- The power plug is not fully settled. >>> Plug it in to settle completely into the socket.
- The fuse connected to the socket powering the product or the main fuse is blown. >>> Check the fuses.

Condensation on the side wall of the cooler compartment (MULTI ZONE, COOL, CONTROL and FLEXI ZONE).

- The door is opened too frequently >>> Take care not to open the product's door too frequently.
- The environment is too humid. >>> Do not install the product in humid environments.
- Foods containing liquids are kept in unsealed holders. >>> Keep the foods containing liquids in sealed holders.
- The product's door is left open. >>> Do not keep the product's door open for long periods.
- The thermostat is set to too low temperature. >>> Set the thermostat to appropriate temperature.

Compressor is not working.

- In case of sudden power failure or pulling the power plug off and putting back on, the gas pressure in the product's cooling system is not balanced, which triggers the compressor thermic safeguard. The product will restart after approximately 6 minutes. If the product does not restart after this period, contact the service.
- Defrosting is active. >>> This is normal for a fully-automatic defrosting product. The defrosting is carried out periodically.
- The product is not plugged in. >>> Make sure the power cord is plugged in.
- The temperature setting is incorrect. >>> Select the appropriate temperature setting.
- The power is out. >>> The product will continue to operate normally once the power is restored.

The refrigerator's operating noise is increasing while in use.

- The product's operating performance may vary depending on the ambient temperature variations. This is normal and not a malfunction.

The refrigerator runs too often or for too long.

- The new product may be larger than the previous one. Larger products will run for longer periods.
- The room temperature may be high. >>> The product will normally run for long periods in higher room temperature.
- The product may have been recently plugged in or a new food item is placed inside. >>> The product will take longer to reach the set temperature when recently plugged in or a new food item is placed inside. This is normal.
- Large quantities of hot food may have been recently placed into the product. >>> Do not place hot food into the product.

- The doors were opened frequently or kept open for long periods. >>> The warm air moving inside will cause the product to run longer. Do not open the doors too frequently.
- The freezer or cooler door may be ajar. >>> Check that the doors are fully closed.
- The product may be set to temperature too low. >>> Set the temperature to a higher degree and wait for the product to reach the adjusted temperature.
- The cooler or freezer door washer may be dirty, worn out, broken or not properly settled. >>> Clean or replace the washer. Damaged / torn door washer will cause the product to run for longer periods to preserve the current temperature.

The freezer temperature is very low, but the cooler temperature is adequate.

- The freezer compartment temperature is set to a very low degree. >>> Set the freezer compartment temperature to a higher degree and check again.

The cooler temperature is very low, but the freezer temperature is adequate.

- The cooler compartment temperature is set to a very low degree. >>> Set the freezer compartment temperature to a higher degree and check again.

The food items kept in cooler compartment drawers are frozen.

- The cooler compartment temperature is set to a very low degree. >>> Set the freezer compartment temperature to a higher degree and check again.

The temperature in the cooler or the freezer is too high.

- The cooler compartment temperature is set to a very high degree. >>> Temperature setting of the cooler compartment has an effect on the temperature in the freezer compartment. Wait until the temperature of relevant parts reach the sufficient level by changing the temperature of cooler or freezer compartments.
- The doors were opened frequently or kept open for long periods. >>> Do not open the doors too frequently.
- The door may be ajar. >>> Fully close the door.
- The product may have been recently plugged in or a new food item is placed inside. >>> This is normal. The product will take longer to reach the set temperature when recently plugged in or a new food item is placed inside.
- Large quantities of hot food may have been recently placed into the product. >>> Do not place hot food into the product.

Shaking or noise.

- The ground is not level or durable. >>> If the product is shaking when moved slowly, adjust the stands to balance the product. Also make sure the ground is sufficiently durable to bear the product.
- Any items placed on the product may cause noise. >>> Remove any items placed on the product.

The product is making noise of liquid flowing, spraying etc.

- The product's operating principles involve liquid and gas flows. >>> This is normal and not a malfunction.

There is sound of wind blowing coming from the product.

- The product uses a fan for the cooling process. This is normal and not a malfunction.

There is condensation on the product's internal walls.

- Hot or humid weather will increase icing and condensation. This is normal and not a malfunction.
- The doors were opened frequently or kept open for long periods. >>> Do not open the doors too frequently; if open, close the door.
- The door may be ajar. >>> Fully close the door.

There is condensation on the product's exterior or between the doors.

- The ambient weather may be humid, this is quite normal in humid weather. >>> The condensation will dissipate when the humidity is reduced.

The interior smells bad.

- The product is not cleaned regularly. >>> Clean the interior regularly using sponge, warm water and carbonated water.
- Certain holders and packaging materials may cause odour. >>> Use holders and packaging materials without free of odour.
- The foods were placed in unsealed holders. >>> Keep the foods in sealed holders. Micro-organisms may spread out of unsealed food items and cause malodour. Remove any expired or spoilt foods from the product.

The door is not closing.

- Food packages may be blocking the door. >>> Relocate any items blocking the doors.
- The product is not standing in full upright position on the ground. >>> Adjust the stands to balance the product.
- The ground is not level or durable. >>> Make sure the ground is level and sufficiently durable to bear the product.

The vegetable bin is jammed.

- The food items may be in contact with the upper section of the drawer. >>> Reorganize the food items in the drawer.

If The Surface Of The Product Is Hot.

- High temperatures may be observed between the two doors, on the side panels and at the rear grill while the product is operating. This is normal and does not require service maintenance!Be careful when touching these areas.

WARNING:

If the problem persists after following the instructions in this section, contact your vendor or an Authorised Service. Do not try to repair the product.

BEKO UK AND IRELAND STANDARD MANUFACTURER GUARANTEE TERMS AND CONDITIONS

Your new Beko product is guaranteed against faulty materials, defective components or manufacturing defects.

The standard guarantee starts from the date of original purchase of the product, and lasts for a period of twelve (12) months unless Beko plc (the "Manufacturer") agrees to extend the guarantee for the product in writing.
If you have purchased an American style Fridge freezer, the standard guarantee starts from the date of original purchase of the product, and lasts for a period of twenty four (24) months unless Beko plc (the "Manufacturer") agrees to extend the guarantee for the product in writing.

If you have any questions about the guarantee on your product (including how long it is valid), please contact your retailer or our contact centre on
0333 207 971(UK and Northern Ireland) or **01 862 3411** (Republic of Ireland)
This guarantee does not in any way diminish or affect your statutory rights in connection with the product. This guarantee is in addition to your statutory rights as a consumer. If you have any questions about these rights, please contact the retailer from which you purchased the product. In certain circumstances, it is possible that your statutory rights may offer additional or higher levels of protection than those offered under the terms of this guarantee.

What is covered by this guarantee?
- Repairs to the product required as a result of faulty materials, defective components or manufacturing defects.
- Functional replacement parts to repair a product.
- The costs of a Beko Approved Engineer to carry out the repair.

What is not covered?
- Transit and delivery damage.
- Cabinet or appearance parts, including but not limited to control knobs, flaps and handles.
- Accessories and/or consumable items including but not limited to ice trays, scrapers, cutlery baskets, filters and light bulbs.
- Repairs necessary as a direct or indirect result of:
  - Accidental damage, misuse or abuse of a product.
  - An attempted repair of a product by anyone other than a Beko Approved Engineer (the "Engineer").
  - Installation or use of a product where such installation or use fails to meet the requirements contained in this guarantee or the User Instructions Booklet.
- Repairs to a product operated at any time on commercial or non-residential household premises (unless we have previously agreed to the installation environment).

This guarantee is limited to the cost of repairing the product. To the extent

permitted by law, the Manufacturer does not accept and will not be held liable for any financial loss incurred in connection with the failure of any product to operate in accordance with the expected standards. Such financial loss includes but is not limited to loss arising from:

- Time taken off work.
- Damaged food, clothing or other items.
- Meals taken at restaurants or from takeaways.
- General compensation for inconvenience.

Important Notes

1. Your product is designed and built for domestic household use only.

2. The guarantee will automatically be void if the product is installed or is used in commercial or non-residential domestic household premises, unless we have previously agreed to the installation environment.

3. The product must be correctly installed, located and operated in accordance with the instructions contained in the User Instructions Booklet provided with your product.

4. Professional installation by a qualified Electrical Domestic Appliance Installer is recommended for all Washing Machines, Dishwashers and Electric Cookers (as incorrect installation may result in you having to pay for the cost of repairing the product).

5. Gas Cookers must be professionally installed by a Gas Safe (or Gas Networks Ireland for Republic of Ireland) registered gas installer.

6. This guarantee is given in respect of products purchased and used within the United Kingdom and the Republic of Ireland.

7. This guarantee is effective from the initial date of purchase of a new product from an authorised retailer and will be void if the product is resold.

8. This guarantee does not apply to graded sales (where the product is purchased as a "second").

9. Possession of a copy of these terms and conditions does not necessarily mean that a product has the benefit of this guarantee. If you have any questions, please call our Call Centre on the number set out above.

10. The Manufacturer reserves the right to terminate the guarantee if its staff or representatives are subjected to physical or verbal abuse in the course of carrying out their duties.

11. Optional extras, where available (i.e. extendable feet) are supplied on a chargeable basis only.

Does Beko offer replacements?

This is a repair-only guarantee. On occasion, the Manufacturer may at its sole discretion, replace your product with a new product instead of carrying out a repair. Where a replacement is offered, this would normally be an identical model but when this is not possible, a model of similar specification will be provided. The Manufacturer will cover the costs and arrange for the delivery of the new product and for the return of the old product. Any costs related to disconnecting the faulty product and installing the replacement product will not be borne by the Manufacturer unless previously agreed to in writing. The original guarantee will continue to apply to the replacement product; the new product will not come with a new guarantee.

When will the repair take place?

Our Engineers work Monday to Friday 9.00am to 5.00pm. Appointments outside these hours may be possible at the sole discretion of the Manufacturer but cannot be guaranteed. Whilst our Engineers will endeavour to minimize inconvenience and to meet requests for specific timed appointments, this cannot be guaranteed. We will not be liable for delays or if it is unable to carry out a repair because a convenient appointment cannot be arranged.

Will there be any charge for the repairs?

It is your responsibility to provide evidence to the Engineer that your product is covered by this guarantee with a proof of purchase. The Manufacturer reserves the right to charge for the reasonable cost of any service call if:

- You cannot provide evidence that your product is covered by this guarantee.
- Where a service call has been made and the engineer finds that there is no fault with your product.
- That your product has not been installed or operated in accordance with the User Instructions Booklet.
- That the fault was caused by something other than faulty materials, defective components or manufacturing defects.
- For missed appointments.

Payment of these costs are due immediately upon the Engineer providing you with an invoice. The Manufacturer reserves the right to terminate the guarantee if you fail to pay the costs for the service call in a timely manner.

If you are a resident of the United Kingdom, this guarantee will be governed by English law and subject to the English Courts, save where you live in another part of the United Kingdom, in which case the law and courts of that location will apply.

If you are resident in the Republic of Ireland, this guarantee will be governed by Irish law and the Irish courts will have jurisdiction.

This guarantee is provided by Beko plc. Beko House, 1 Greenhill Crescent, Watford, Hertfordshire. WD18 8QU.

Beko plc is registered in England and Wales with company registration number 02415578

BEKO UK AND IRELAND BUILT-IN APPLIANCES GUARANTEE TERMS AND CONDITIONS

If you have purchased a built-in or integrated appliance, and registered it within 90 days of purchase by completing the online registration form, then the standard 12 month guarantee will be extended to 24 months, under the same terms and conditions as detailed in our Standard Guarantee Terms and Conditions.
Beko Free standing appliances come with a 12 month parts and labour guarantee as standard,

Beko Built-in appliances come with a 12 month parts and labour guarantee as standard. This is extended to 24 months, free of charge, upon registration of the appliance. When you register your appliance for additional guarantee, you will automatically activate the ProSmart Motor 10 year guarantee. You do not need to register twice. (beko.co.uk/guarantee-terms).

To make a claim against your Beko ProSmart Inverter Motor Guarantee (the "Guarantee"), all customer and product details must be registered with Beko plc using the procedure outlined below.

1. This extra 9 years (for free standing appliances) or 8 years (for built-in or integrated appliances) guarantee is only effective after the expiration of the standard manufacturer's guarantee.

2. It is only valid for the ProSmart Inverter motors of selected washing machines, washer-dryers, tumble dryers and dishwashers. It does not cover any labour charge or any other components of the product. In addition, it is only valid for one replacement of the ProSmart motor during the extra 9-year (for free standing appliances) or 8 year (for built-in appliances) guarantee period.

3. To activate your guarantee, you MUST register your appliance within 90 days of the original purchase date, by visiting beko.co.uk/register.

4. Customers will receive a unique reference code as proof of guarantee validation by email or post, which must be quoted at the time of a claim being made.

5. Any repair/replacement of the ProSmart Inverter motor must only be carried out by an authorised Beko Service Agent (the "Service Agent").

6. Labour for the repair/replacement of the ProSmart Inverter motor is not included in this guarantee and is chargeable directly by the Service Agent.

7. Any additional components fitted to the product at any time will not be covered by this guarantee and will be chargeable directly by the Service Agent.

8. The guarantee is not transferable and cannot be exchanged for cash.

9. There are no alternative or additional offers to this Guarantee.

10. The guarantee is exclusive of the manufacturer's standard guarantee

11. The Terms and Conditions shown above are in addition to the standard terms and conditions of your product guarantee. Please read and refer to such Terms and Conditions when making any claim.

12. We may use the information you provide for marketing purposes and to analyse your purchasing preferences. We may keep your information for a reasonable period for these purposes in accordance with the applicable Data Protection Laws and General Data Protection Regulations (GDPR). You can opt into this service during the registration process. Further details are available at http://www.beko.co.uk/cookie-and-privacy.

13. These Terms and Conditions are governed by the laws of England and Wales; manufacturer: Beko plc, Beko House, 1 Greenhill Crescent, Watford WD18 8QU. Company Registration Number: 02415578.

HOW TO OBTAIN SERVICE FOR YOUR APPLIANCE

Please keep your purchase receipt or other proof of purchase details in a safe place; you will need to have this documentation available should the product require attention under guarantee.

Please take a few moments to complete the details below, as you will need this information when you call us, or to use our online services. When you call us you may be required to input your serial number into your telephone keypad. For help please visit beko.co.uk/support/model-finder

- The product model number is printed on the Operating Instruction Booklet / User guide
- The product model and serial number is printed on the Rating Label affixed to the appliance.
- The Retailer (Purchased from) and Date of purchase will be printed on your purchase receipt or other proof of purchase paperwork

Recording of these details alone will not count as proof of purchase. A valid proof of purchase is required for requesting service under guarantee.

Model number	Serial number	Purchased from	Date of purchase

For service under guarantee or for product advice please call our Contact centre

Before requesting service please check the troubleshooting guide in the Operating Instructions booklet, as a charge may be levied where no fault is found, and even though your product may still be under guarantee.

After arranging service the area around the product must be easily accessible to the Engineer, without the need for cabinets or furniture to be removed or moved.

It is your responsibility to ensure our Engineers have a clean and safe environment to carry out any repairs.

Please have your Model number and Serial number available when you call us, as you may be required to input your serial number into your telephone keypad during your call.

UK Mainland & Northern Ireland:

0333 207 9710

Landline or mobile calls to 0333 numbers cost no more than calls to geographic numbers 01 or 02, and are charged at the basic rate. Calls from landlines and mobiles are included in free call packages but please check with your telephone service provider for exact call charges.

Republic of Ireland:

01 862 3411

Service once the manufacturers guarantee has expired

If you have purchased an extended guarantee please refer to the instructions contained within the extended guarantee agreement document, otherwise please call us using the appropriate number above, where service can be obtained at a charge.

Should you experience any difficulty in obtaining service please call us on **0333 207 9710** or **01 862 3411**

Contact us though our website

Send us a secure message through our online contact us form. Please visit our website, click Contact Us and choose a product support topic from the list of options. Complete the required details and click send message.

Product registrations

For UK registrations please visit beko.co.uk/register and for the Republic of Ireland visit beko.ie/register.

DISCLAIMER / WARNING

Some (simple) failures can be adequately handled by the end-user without any safety issue or unsafe use arising, provided that they are carried out within the limits and in accordance with the following instructions (see the "Self-Repair" section).

Therefore, unless otherwise authorized in the "Self-Repair" section below, repairs shall be addressed to registered professional repairers in order to avoid safety issues. A registered professional repairer is a professional repairer that has been granted access to the instructions and spare parts list of this product by the manufacturer according to the methods described in legislative acts pursuant to Directive 2009/125/EC.

However, only the service agent (i.e. authorized professional repairers) that you can reach through the phone number given in the user manual/ warranty card or through your authorized dealer may provide service under the guarantee terms. Therefore, please be advised that repairs by professional repairers (who are not authorized by Beko) shall void the guarantee.

Self-Repair

Self-repair can be done by the end-user with regard to the following spare parts: door handles,door hinges, trays, baskets and door gaskets (an updated list is also available in support.beko.com as of 1st March 2021).

Moreover, to ensure product safety and to prevent risk of serious injury, the mentioned self-repair shall be done following the instructions in the user manual for self-repair or which are available in support.beko.com. For your safety, unplug the product before attempting any self-repair.

Repair and repair attempts by end-users for parts not included in such list and/or not following the instructions in the user manuals for self-repair or which are available in support.beko.com, might give raise to safety issues not attributable to Beko, and will void the warranty of the product.

Therefore, it is highly recommended that end-users refrain from the attempt to carry out repairs falling outside the mentioned list of spare parts, contacting in such cases authorized professional repairers or registered professional repairers. On the contrary, such attempts by end-users may cause safety issues and damage the product and subsequently cause fire, flood, electrocution and serious personal injury to occur.

By way of example, but not limited to, the following repairs must be addressed to authorized professional repairers or registered professional repairers: compressor, cooling circuit, main board,inverter board, display board, etc.

The manufacturer/seller cannot be held liable in any case where end-users do not comply with the above.

The spare part availability of the refrigerator that you purchased is 10 years.

During this period, original spare parts will be available to operate the refrigerator properly

The minimum duration of guarantee of the refrigerator that you purchased is 24 months.

This product is equipped with a lighting source of the "G" energy class.

The lighting source in this product shall only be replaced by professional repairers.